# Centrifugal Fans
## double inlet with direct drive backwardcurved true airfoil blades

Issue 1.4
September 2013

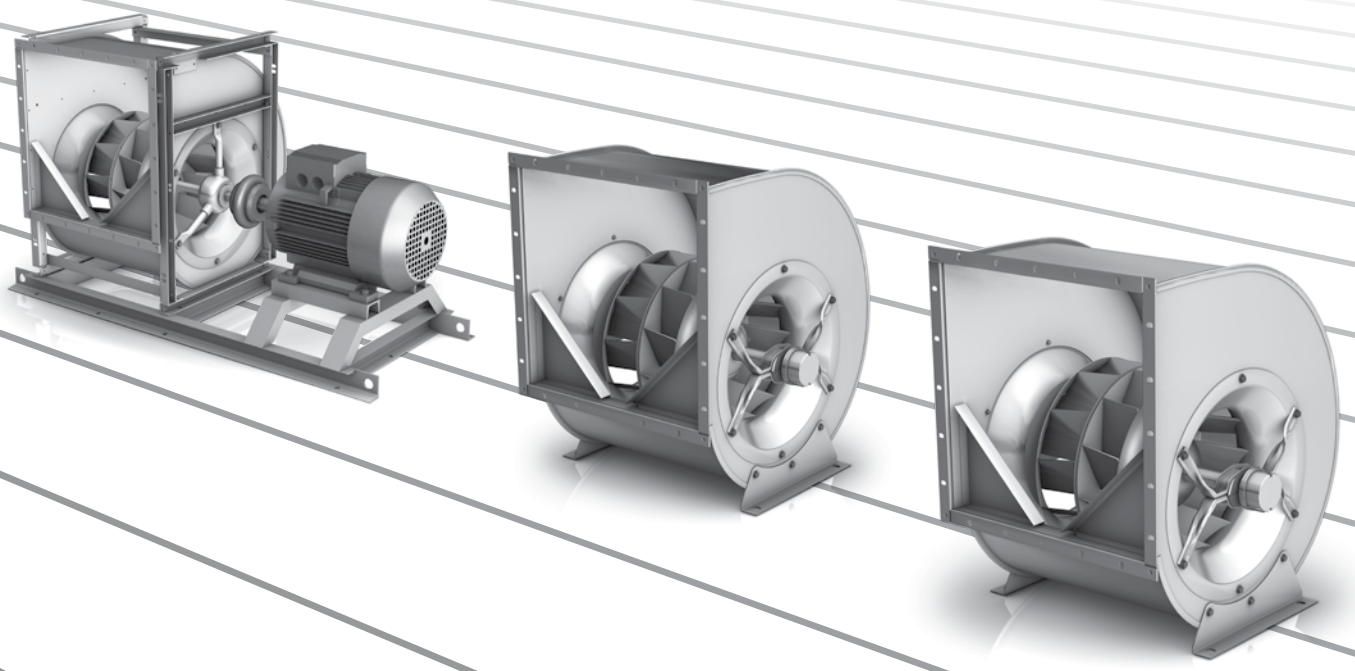

NICOTRA | Gebhardt

# The overall picture will decide

Depending on the model of the fan, the efficiency grade “N” set in accordance with the ErP Directive must be achieved from 2013 and 2015 respectively.
Efficiency grade “N” to ErP-Directive

| | Centrifugal fans with backward curved blades | | | Centrifugal fans with forward curved blades | |
|---|---|---|---|---|---|
| | without housing | with housing | | with housing | |
| Year | static | static | total | static | total |
| **2013** | 58 | 58 | 61 | 37 | 42 |
| **2015** | 62 | 61 | 64 | 44 | 49 |

The efficiency grade designates a parameter in the calculation of the target energy efficiency of a fan depending on the electric input power when operating at the optimal energy efficiency point. The figure of parameter “N” corresponds to the target energy efficiency with a power of 10 kW.

**To make the selection easier for our customers, we offer complete systems as defined by the ErP Directive!**

In order to compare the systems, the total efficiency $\eta_e$ of the fan without speed regulation is considered.

$$\eta_e = P_{u(s)} / P_e$$

$\eta_e$ = Total efficiency
$P_{u(s)}$ = Fan gas power when operating at the optimal energy efficiency point
$P_e$ = Electric input power when operating at the optimal energy efficiency point

If the system has speed regulation, it will be taken into account with the “part load compensation factor” $C_c$ (see below):

$$\eta_e = P_{u(s)} / P_{e(d)} \cdot C_c$$

$P_{ed}$ = Input power of speed regulator when operating at the optimal energy efficiency point
$C_c$ = part load compensation factor

- without speed regulation: $C_c = 1$
- with speed regulation $P_{ed} \geq 5$ kW: $C_c = 1.04$
- with speed regulation $P_{ed} < 5$ kW: $C_c = -0.03 \ln(P_{ed}) + 1.088$

In order to take the speed regulation into account via the part load compensation factor $C_c$, the following mathematical losses arise in accordance with the formula prescribed by ErP for the following typical motor powers:

- $P_{ed}$ = 4.00 kW: $C_c = 1.05$ (5 %)
- $P_{ed}$ = 2.20 kW: $C_c = 1.06$ (6 %)
- $P_{ed}$ = 0.75 kW: $C_c = 1.10$ (10 %)

## Complete systems by Nicotra Gebhardt

Nicotra Gebhardt can supply complete systems in all product categories which meet the ErP requirements. We offer highly efficient fan systems

- with matching components and “high efficiency drives” – belt and direct drive.
- with integrated or external control to regulate speed.
- with IEC standard motors (IE2) or internal rotor motors with brushless DC technology.
- and with AC external rotor motors or brushless DC external rotor motors.

## Building blocks for best values

Thanks to the decades-long experience of Nicotra Gebhardt all the components of our fans contribute to their high performance.

Impellers and blades are optimised for turbulence and therefore particularly efficient. An example: With the latest development, the RLM Evo impeller, the free-running centrifugal fans of Nicotra Gebhardt achieve system efficiency grades never reached before.

In addition, the brushless DC drives which Nicotra Gebhardt offers for its direct drive fans improve the system efficiency grades.

**The fan technology of Nicotra Gebhardt delivers highly efficient systems for all applications.**

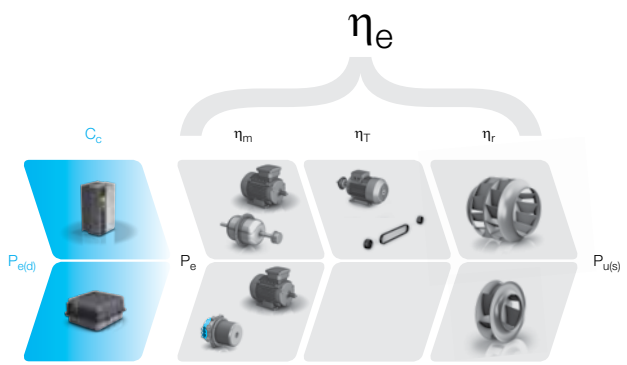

| | | RZM | RZP | RZA |
|---|---|---|---|---|
| | | 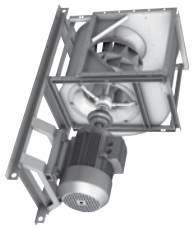 | | |
| Flow rate | 6.000 m³/h | ● | ● | ● |
| | 10.000 m³/h | ● | ● | ● |
| | 18.000 m³/h | ● | | ● |
| | 35.000 m³/h | ● | | ● |
| | 100.000 m³/h | ● | | |
| | 200.000 m³/h | ● | | |
| Media temperature | 40 °C | ● | ● | ● |
| | 60 °C | ● | | |
| | 80 °C | ● | | |
| | ATEX | ● | | |
| Speed control | Voltage | | | |
| | Brushless-DC | | ● | |
| | External Inverter | ● | | ● |
| Impeller | Forward curved blades galvanised sheet steel | | | |
| | Backward curved blades coated steel | ● | ● | ● |
| Casing material | Galvanised steel | ● ≤ 1000 | ● | ● ≤ 0280 |
| | Coated steel | ● ≥ 1120 | | ● ≥ 0315 |
| Inlet type | Single inlet | | | |
| | Double inlet | ● | ● | ● |
| | ErP status | ErP 2015 | ErP 2015 | ErP 2015 |

# proSELECTA II

proSELECTA II is a technical selection program that allows you to configure your own individually designed fan. It provides you with the opportunity to choose from the entire range of fan types and their associated options.

## Simple and reliable selection

The result from proSELECTA II is the provision of all the technical data for your fan, including sound level data, dimension specifications and accessories. Apart from that, as a registered user, your purchase prices are provided. Additionally fully dimensioned drawings in dxf format are available, which can be downloaded and transferred straight into your CAD system.

So that you can be sure. Models and options that are technically not permissible, are automatically excluded in proSELECTA II. So there is no chance that you will configure a “wrong” device option.

You can register as a proSELECTA II user with us, which enables us to offer you faster order processing. What this means for you is:

- The complete configuration of your fan with its associated system accessories and belt drive layout.
- The possibility to produce fans that operate via a frequency inverter.
- The option of saving your own fan configuration on our server.
- The opportunity to modify your saved configuration, even over the phone to your Nicotra Gebhardt representative.

# Nicotra Gebhardt technologies like ...

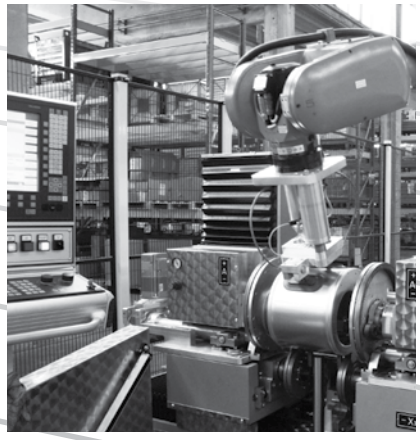

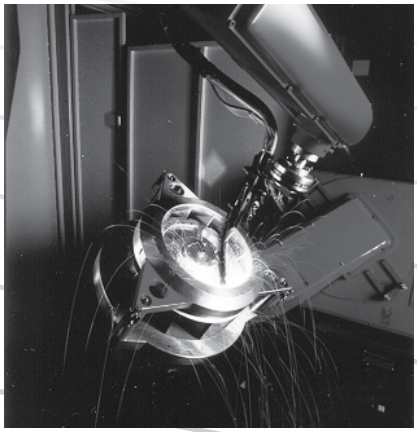

Automated manufacture of compact scroll and impeller with forward curved blades

Own motor production for optimal tuniung of motor and fan!

# Highest system performance and best energy efficiency

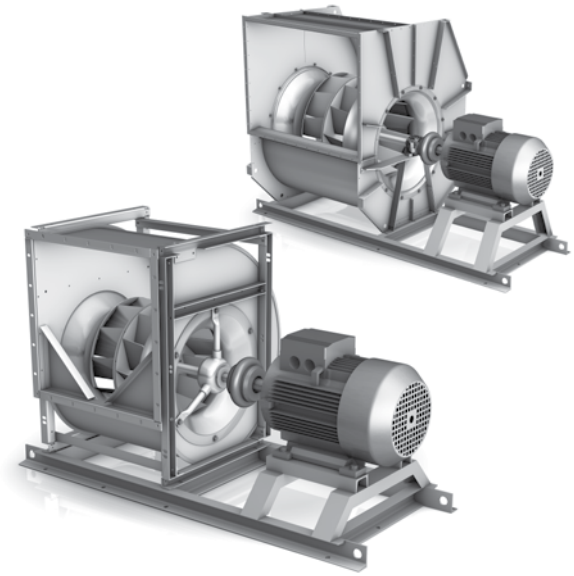

## The RZM rotavent serie

**Economic, quiet and compact:**
Through the combination of two high technologies - the aerodynamics of the rotavent impeller combined with energy efficient IEC motors - Nicotra Gebhardt has developed a series of coupled direct driven centrifugal fans setting new standards for economy and quiet operation.

**Your benefits:**
- powerful fan range direct driven with coupling
- maintenance and wear free drive (no V-belts)
- short payback time due to high energy saving, especially with long operating periods
- higher comfort levels through particularly low noise fans and motors
- problem free speed control from with frequency inverter

**Top quality for performance and a long service life!**
Alongside an intelligent construction, aspects such as the quality of materials and workmanship play a crucial role in ensuring a long life cycle.
Apart from that, the tried and tested quality of our successful, long-standing RZR series remains the same. And that means robust impeller constructions, non-corrosive impeller shafts and quality bearings – for a long life with minimum noise.

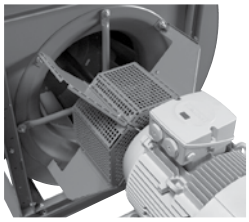

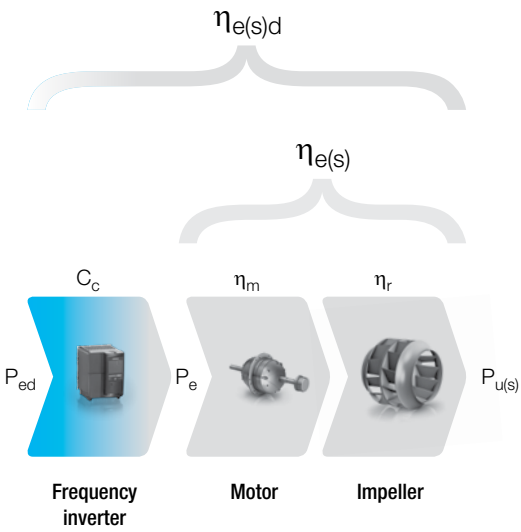


*Make use of our technical selection program proSELECTA II. You receive all technical data for your fan, easy–quick–reliable.*

**System efficiency**
The given System Efficiency is the efficiency of the whole system and includes the individual efficiencies of the component Fan – Motor – Frequency inverter.

**ErP conformity**
Depending on the model of the fan, the efficiency grade "N" set in accordance with the ErP Directive must be achieved from 2013 and 2015 respectively.
The efficiency grade designates a parameter in the calculation of the target energy efficiency of a fan depending on the electric input power when operating at the optimal energy efficiency point. The figure of parameter "N" corresponds to the target energy efficiency with a power of 10 kW.

**Efficiency grade "N" to ErP Directive**
Centrifugal fans with backward curved blades with housing

| Measure-ment category | Efficiency category | Power range P [kW] | Target energy efficiency | Efficiency grade "N" Year 2013 | 2015 |
|---|---|---|---|---|---|
| A, C | static | $0.125 \le P \le 10$ | $\eta_{target} = 4.56 \cdot \ln(P) - 10.5 + N$ | 58 | 61 |
| | | $10 < P \le 500$ | $\eta_{target} = 1.10 \cdot \ln(P) - 2.60 + N$ | | |
| B, D | total | $0.125 \le P \le 10$ | $\eta_{target} = 4.56 \cdot \ln(P) - 10.5 + N$ | 61 | 64 |
| | | $10 < P \le 500$ | $\eta_{target} = 1.10 \cdot \ln(P) - 2.60 + N$ | | |

A technical data list according to ErP-REGULATION 327/2011/EU of all fans is available at the end of this chapter "RZM".

# The powerful high technologie!

**Optimal aerodynamics**
Low turbulance velocity for both inlet and discharge due to the large free cross section and minimal flow restraint of the impeller, an example of aerodynamics and performance of the rotavent.

**Your benefits:**
- negligible sensitivity to built in disturbances
- minor pressure loss with free discharge operation
- smaller, yet greater energy performance

**Acoustics**
Reduction of high frequency noise levels is just one of the advantages of the rotavent, together with optimised AC-motors.
Minimal sound levels due to low blade passing frequencies from the optimised impeller geometry of the rotavent. The impeller has obliquely inclined blades with trailing edges, and the throat plate is inclined opposingly.

**Your benefits:**
- reduced size and costs of attenuation and silencers

**High efficiencies**
Nicotra Gebhardt fans of the RZM rotavent range are operating at high efficiency in wide area of the fan curve.

**Your benefits:**
- low running costs
- high efficiency

**Wear-free drive by direct coupling**
The use of direct coupling drive avoids wear of the drive as this is the case with belt driven fans.

**Your benefits:**
- no subsequent filter necessary
- less dust in the system

**The benefits of rotavent RZM**
The high value and precisely manufactured components of rotavent, manufactured with most modern machinery for demanding tolerance standards, are the basis for a product range satisfying highest quality requirements.

| Version | Description | Figure |
|---|---|---|
| **RZM 15-0400/-1000** | Lap jointed scroll of galvanised steel sheet with discharge flange and heavy duty reinforced side frames.<br>Medium-heavy duty bearing execution with cast iron housing/strut assemblies.<br>High performance impeller with hollow section true aerofoil blades, welded and epoxy coated.<br>Fan with motor and elastic coupling mounted on a robust base frame. | |
| **RZM 18-0630/-1000** | Lap jointed scroll of galvanised steel sheet with discharge flange and heavy duty reinforced side frames.<br>Heavy duty bearing execution with split-type plummer block, mounted on robust pedestal.<br>High performance impeller with hollow section true aerofoil blades, welded and epoxy coated.<br>Fan with motor and elastic coupling mounted on a robust base frame. | |
| **RZM 13-1120/-1400** | Heavy duty casing of sheet steel with stiffening members, step welded and coated, with discharge flange.<br>Casing is split on one axis (Size 1120), split on two axis (Sizes 1250/-1400).<br>Heavy duty bearing execution with split-type plummer blocks, mounted on robust pedestal.<br>High performance impeller with hollow section true aerofoil blades, welded and epoxy coated.<br>Fan with motor and elastic coupling mounted on a robust base frame. | |

# RZM 15-0400

## Technical Data

**Please note coloured area!**

- ☐ all types suitable
- ■ do not use in this area

**Impeller Data**

| | | | |
|---|---|---|---|
| Impeller diameter | $D_r$ | 406 | mm |
| Number of blades | z | 12 | |
| Moment of Inertia | J | 0.33 | kgm² |

**Impeller Data**

| | | | |
|---|---|---|---|
| Impeller weight | m | 10.5 | kg |
| Density of media | $\rho_1$ | 1.2 | kg/m³ |

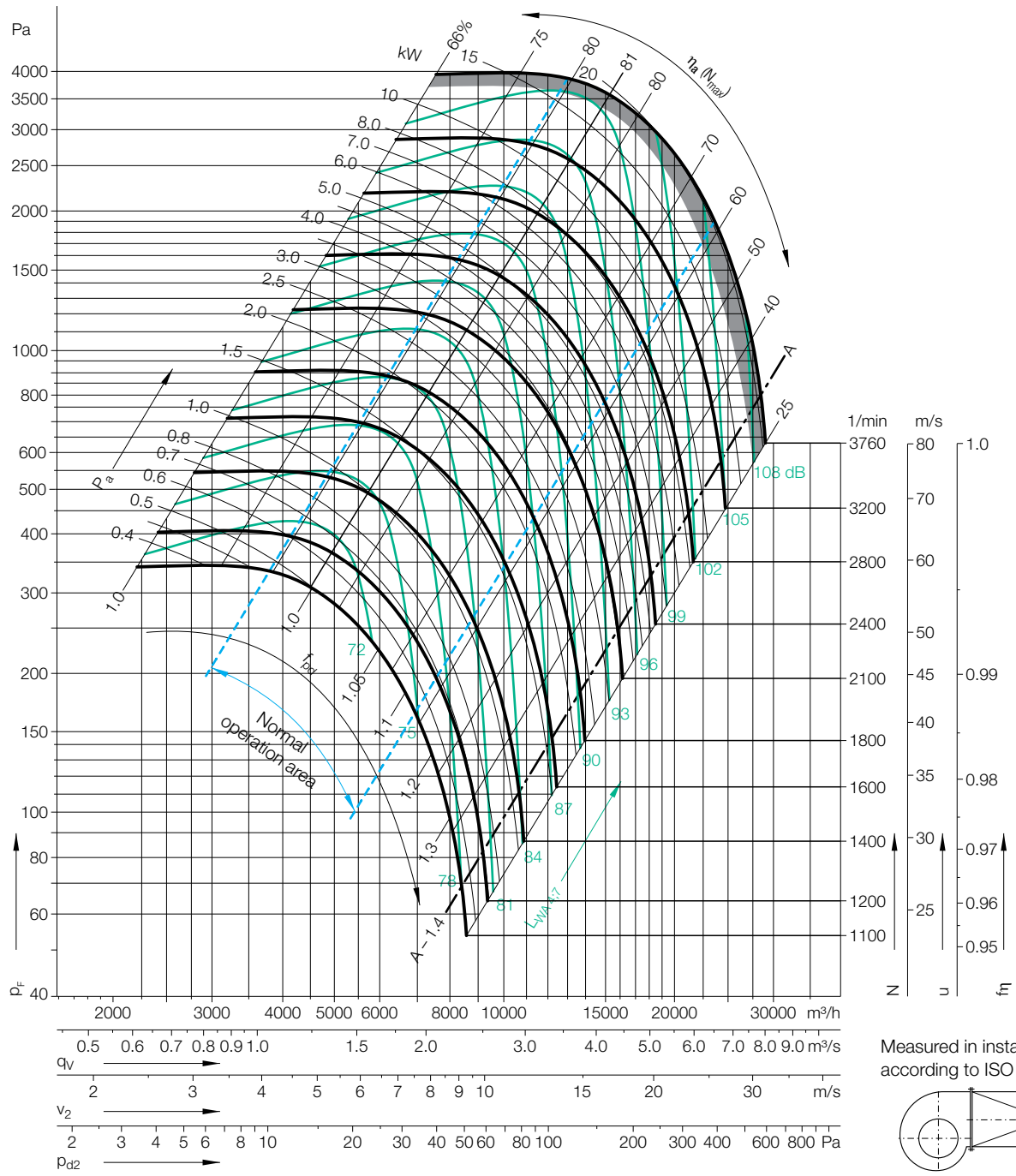


Measured in installation B according to ISO 5801:

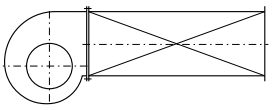

## Determination of the Octave level

Relative sound power level for **inlet side** $L_{Wrel7}$ at octave band correction factors $f_c$.

| Speed | Duty point | 63 | 125 | 250 | 500 | 1000 | 2000 | 4000 | 8000 | Hz |
|---|---|---|---|---|---|---|---|---|---|---|
| ≤1882 1/min | ≤0.8 $q_{Vopt}$ | 0 | 2 | 0 | -3 | -6 | -9 | -12 | -19 | dB |
| | >0.8-1.2 $q_{Vopt}$ | -2 | 1 | -2 | -3 | -6 | -8 | -14 | -20 | dB |
| | >1.2-1.6 $q_{Vopt}$ | -3 | 0 | -1 | -3 | -6 | -8 | -14 | -21 | dB |
| | >1.6 $q_{Vopt}$ | -5 | -3 | -3 | -3 | -6 | -7 | -13 | -21 | dB |
| **Speed** | **Duty point** | **63** | **125** | **250** | **500** | **1000** | **2000** | **4000** | **8000** | **Hz** |
| >1882 1/min | ≤0.8 $q_{Vopt}$ | -2 | -1 | -3 | -1 | -6 | -10 | -15 | -21 | dB |
| | >0.8-1.2 $q_{Vopt}$ | -7 | -4 | -5 | -1 | -6 | -9 | -14 | -21 | dB |
| | >1.2-1.6 $q_{Vopt}$ | -10 | -7 | -8 | -1 | -5 | -8 | -13 | -21 | dB |
| | >1.6 $q_{Vopt}$ | -10 | -8 | -8 | -2 | -6 | -8 | -11 | -18 | dB |

Relative sound power level for **discharge side** $L_{Wrel4}$ at octave band correction factors $f_c$.

| 63 | 125 | 250 | 500 | 1000 | 2000 | 4000 | 8000 | Hz |
|---|---|---|---|---|---|---|---|---|
| 13 | 7 | 4 | -3 | -8 | -14 | -17 | -25 | dB |
| 10 | 5 | 3 | -2 | -7 | -13 | -17 | -25 | dB |
| 7 | 2 | 2 | -2 | -6 | -12 | -18 | -27 | dB |
| 5 | 1 | 1 | -2 | -6 | -10 | -17 | -27 | dB |
| **63** | **125** | **250** | **500** | **1000** | **2000** | **4000** | **8000** | **Hz** |
| 11 | 4 | 2 | 0 | -7 | -12 | -17 | -24 | dB |
| 7 | 1 | -2 | -3 | -6 | -10 | -15 | -23 | dB |
| 3 | -2 | -4 | -3 | -5 | -9 | -14 | -23 | dB |
| 2 | -3 | -5 | -3 | -5 | -9 | -12 | -21 | dB |

# RZM 15-0400

## Technical Data

| RZM 15- | Nominal motor power kW | Poles | Motor size | Motor voltage V | Phases | Nominal frequency Hz | Connection | Nominal motor current A | Nominal motor speed 1/min | Max. fan speed 1/min | Max. operating frequency Hz | Weight kg |
|---|---|---|---|---|---|---|---|---|---|---|---|---|
| **0400-4W-16** | 2.2 | 4 | 100L | 230/400 | 3~ | 50 | △/Y | 8.1/4.65 | 1455 | 1760 | 60 | 164 |
| **0400-4D-17** | 3.0 | 4 | 100Lb | 400 | 3~ | 50 | △ | 6.3 | 1425 | 1950 | 68 | 192 |
| **0400-4D-19** | 4.0 | 4 | 112M | 400 | 3~ | 50 | △ | 8.2 | 1435 | 2160 | 75 | 192 |
| **0400-4D-21** | 5.5 | 4 | 132Sa | 400 | 3~ | 50 | △ | 11.4 | 1450 | 2390 | 82 | 264 |
| **0400-4D-23** | 7.5 | 4 | 132Ma | 400 | 3~ | 50 | △ | 15.4 | 1450 | 2650 | 91 | 264 |
| **0400-2D-26** | 11.0 | 2 | 160Ma | 400 | 3~ | 50 | △ | 21.5 | 2920 | 2970 | 51 | 151 |
| **0400-2D-27** | 15.0 | 2 | 160Mb | 400 | 3~ | 50 | △ | 29.0 | 2930 | 3300 | 56 | 151 |

**Motor code:**
- W = Asynchronous motor (efficiency class IE2)
- D = Asynchronous motor

## Dimensions in mm, subject to change.

RZM 15-0400

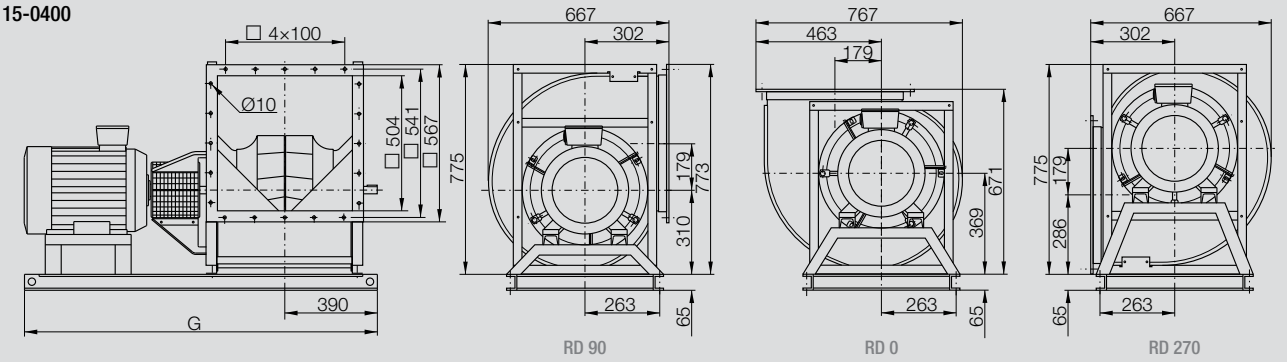


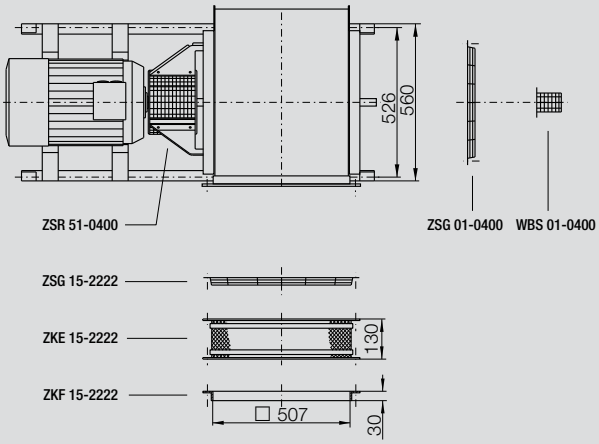


| Motor | G |
|---|---|
| **100** | 1203 |
| **112** | 1210 |
| **132** | 1299 |
| **160** | 1398 |

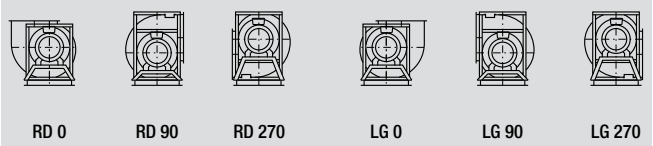


## Accessories

| RZM 15- | Frequency Inverter Unit MM420 for 3~ | Line Choke for 3~ | Frequency inverter 6SE6430- | Control Panel for frequency inverter 6SE6420- and 6SE6430- |
|---|---|---|---|---|
| **0400-4W-16** | MM420 3AC 400V 2.20KW EMV B | 6SE6400-3CC01-0BD3 | - | - |
| **0400-4D-17** | MM420 3AC 400V 3.00KW EMV B | 6SE6400-3CC01-0BD3 | - | - |
| **0400-4D-19** | MM420 3AC 400V 4.00KW EMV B | 6SE6400-3CC01-4BD3 | - | - |
| **0400-4D-21** | MM420 3AC 400V 5.50KW EMV B | 6SE6400-3CC02-2CD3 | - | - |
| **0400-4D-23** | MM420 3AC 400V 7.50KW EMV B | 6SE6400-3CC02-2CD3 | - | - |
| **0400-2D-26** | MM420 3AC 400V 11.0KW EMV B | 6SE6400-3CC02-5CD3 | - | - |
| **0400-2D-27** | - | 6SE6400-3CC03-5CD3 | 6SE6430-2AD31-5CA0 | 6SE6400-0BE00-0AA0 |

# RZM 15-0450

## Technical Data

**Please note coloured area!**

☐ all types suitable

**Impeller Data**

| | | | |
|---|---|---|---|
| Impeller diameter | $D_r$ | 455 | mm |
| Number of blades | z | 12 | |
| Moment of Inertia | J | 0.6 | kgm² |

**Impeller Data**

| | | | |
|---|---|---|---|
| Impeller weight | m | 15.8 | kg |
| Density of media | $\rho_1$ | 1.2 | kg/m³ |

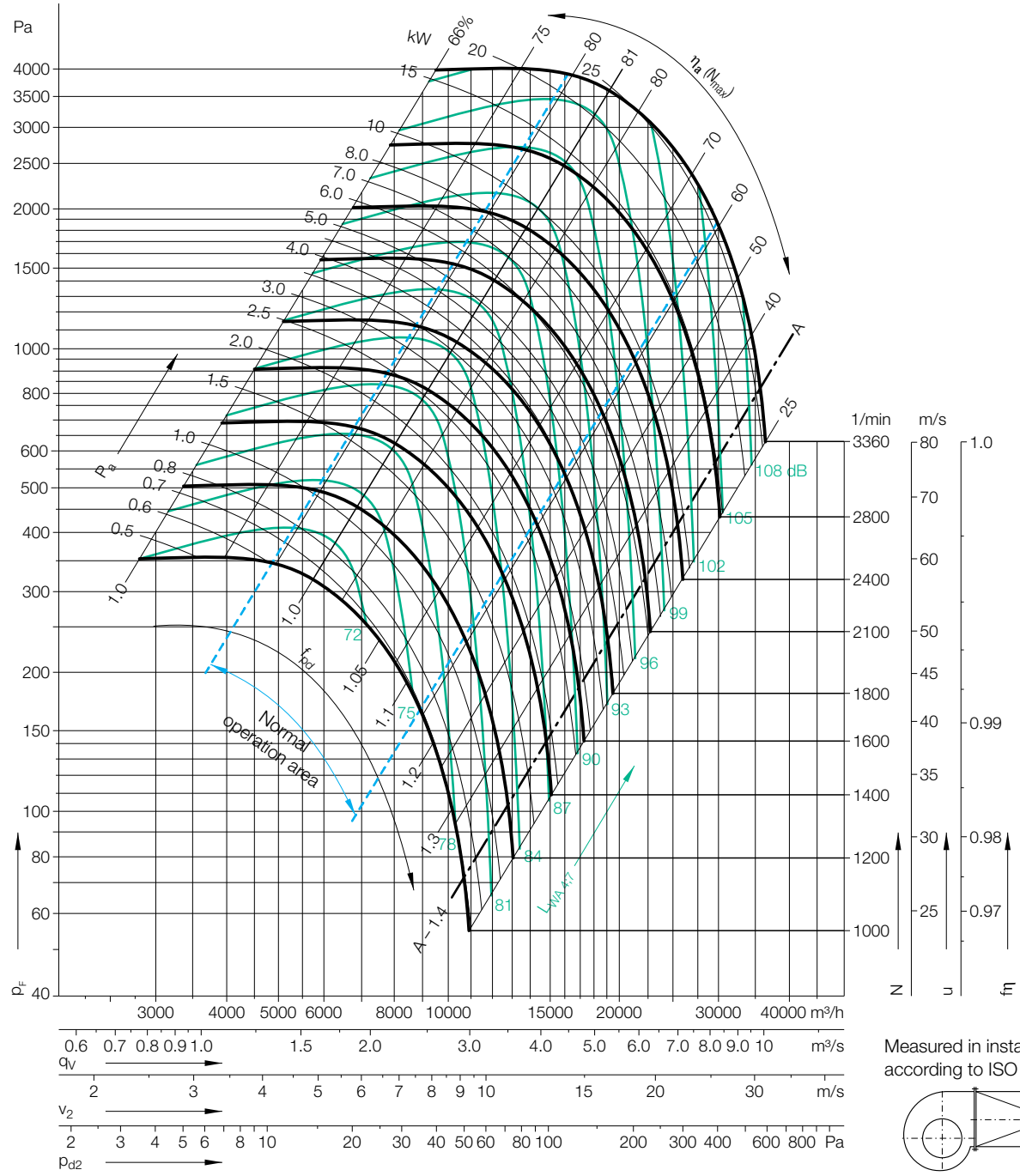


Measured in installation B according to ISO 5801:

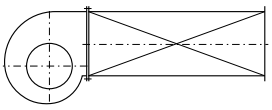

## Determination of the Octave level

Relative sound power level for **inlet side** $L_{Wrel7}$ at octave band correction factors $f_c$.

| Speed | Duty point | 63 | 125 | 250 | 500 | 1000 | 2000 | 4000 | 8000 | Hz |
|---|---|---|---|---|---|---|---|---|---|---|
| ≤1679 1/min | ≤0.8 $q_{Vopt}$ | 0 | 2 | 0 | -3 | -6 | -9 | -12 | -19 | dB |
| | >0.8-1.2 $q_{Vopt}$ | -2 | 1 | -2 | -3 | -6 | -8 | -14 | -20 | dB |
| | >1.2-1.6 $q_{Vopt}$ | -3 | 0 | -1 | -3 | -6 | -8 | -14 | -21 | dB |
| | >1.6 $q_{Vopt}$ | -5 | -3 | -3 | -3 | -6 | -7 | -13 | -21 | dB |
| **Speed** | **Duty point** | **63** | **125** | **250** | **500** | **1000** | **2000** | **4000** | **8000** | **Hz** |
| >1679 1/min | ≤0.8 $q_{Vopt}$ | -2 | -1 | -3 | -1 | -6 | -10 | -15 | -21 | dB |
| | >0.8-1.2 $q_{Vopt}$ | -7 | -4 | -5 | -1 | -6 | -9 | -14 | -21 | dB |
| | >1.2-1.6 $q_{Vopt}$ | -10 | -7 | -8 | -1 | -5 | -8 | -13 | -21 | dB |
| | >1.6 $q_{Vopt}$ | -10 | -8 | -8 | -2 | -6 | -8 | -11 | -18 | dB |

Relative sound power level for **discharge side** $L_{Wrel4}$ at octave band correction factors $f_c$.

| 63 | 125 | 250 | 500 | 1000 | 2000 | 4000 | 8000 | Hz |
|---|---|---|---|---|---|---|---|---|
| 13 | 7 | 4 | -3 | -8 | -14 | -17 | -25 | dB |
| 10 | 5 | 3 | -2 | -7 | -13 | -17 | -25 | dB |
| 7 | 2 | 2 | -2 | -6 | -12 | -18 | -27 | dB |
| 5 | 1 | 1 | -2 | -6 | -10 | -17 | -27 | dB |
| **63** | **125** | **250** | **500** | **1000** | **2000** | **4000** | **8000** | **Hz** |
| 11 | 4 | 2 | 0 | -7 | -12 | -17 | -24 | dB |
| 7 | 1 | -2 | -3 | -6 | -10 | -15 | -23 | dB |
| 3 | -2 | -4 | -3 | -5 | -9 | -14 | -23 | dB |
| 2 | -3 | -5 | -3 | -5 | -9 | -12 | -21 | dB |

# RZM 15-0450

## Technical Data

| RZM 15- | Nominal motor power kW | Poles | Motor size | Motor voltage V | Phases | Nominal frequency Hz | Connection | Nominal motor current A | Nominal motor speed 1/min | Max. fan speed 1/min | Max. operating frequency Hz | Weight kg |
|---|---|---|---|---|---|---|---|---|---|---|---|---|
| **0450-4D-19** | 4.0 | 4 | 112M | 400 | 3~ | 50 | △ | 8.2 | 1435 | 1770 | 61 | 182 |
| **0450-4D-21** | 5.5 | 4 | 132Sa | 400 | 3~ | 50 | △ | 11.4 | 1450 | 1960 | 67 | 210 |
| **0450-4D-23** | 7.5 | 4 | 132Ma | 400 | 3~ | 50 | △ | 15.4 | 1450 | 2180 | 75 | 210 |
| **0450-4D-26** | 11.0 | 4 | 160Ma | 400 | 3~ | 50 | △ | 22.0 | 1460 | 2480 | 85 | 281 |
| **0450-4D-28** | 15.0 | 4 | 160L | 400 | 3~ | 50 | △ | 30.0 | 1460 | 2760 | 94 | 281 |
| **0450-2D-28** | 18.5 | 2 | 160L | 400 | 3~ | 50 | △ | 35.0 | 2935 | 2940 | 50 | 281 |
| **0450-2D-30** | 22.0 | 2 | 180M | 400 | 3~ | 50 | △ | 41.0 | 2945 | 3080 | 52 | 319 |

**Motor code:**
- W = Asynchronous motor (efficiency class IE2)
- D = Asynchronous motor

## Dimensions in mm, subject to change.

RZM 15-0450

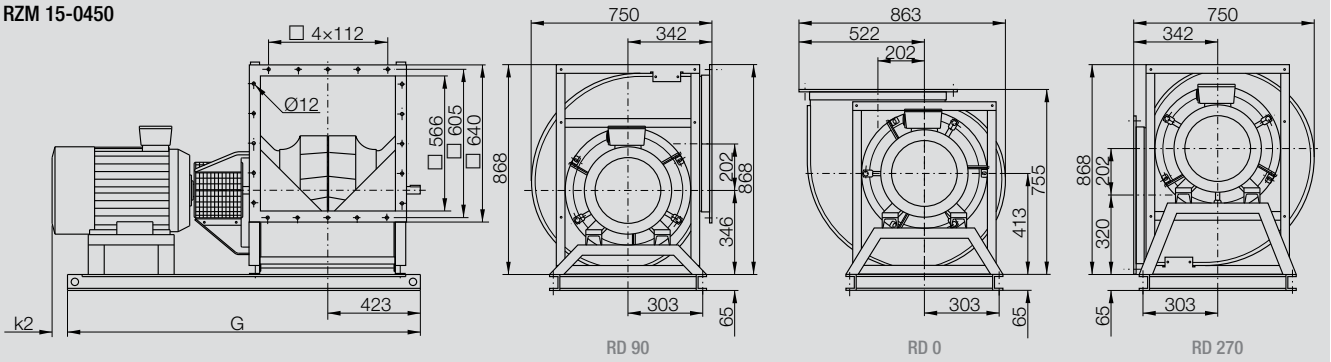


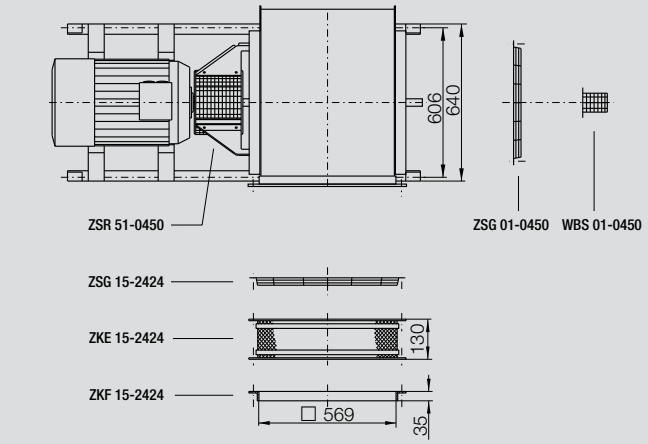


| Motor | G | k2 |
|---|---|---|
| **112** | 1273 | – |
| **132** | 1362 | – |
| **160** | 1499 | – |
| **180** | 1499 | 78 |

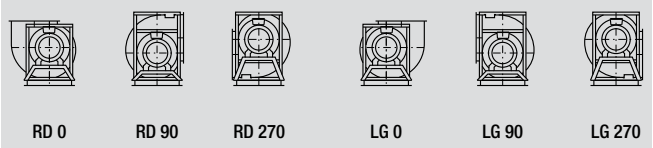


## Accessories

| RZM 15- | Frequency Inverter Unit MM420 for 3~ | Line Choke for 3~ | Frequency inverter 6SE6430- | Control Panel for frequency inverter 6SE6420- and 6SE6430- |
|---|---|---|---|---|
| **0450-4D-19** | MM420 3AC 400V 4.00KW EMV B | 6SE6400-3CC01-4BD3 | - | - |
| **0450-4D-21** | MM420 3AC 400V 5.50KW EMV B | 6SE6400-3CC02-2CD3 | - | - |
| **0450-4D-23** | MM420 3AC 400V 7.50KW EMV B | 6SE6400-3CC02-2CD3 | - | - |
| **0450-4D-26** | MM420 3AC 400V 11.0KW EMV B | 6SE6400-3CC02-5CD3 | - | - |
| **0450-4D-28** | - | 6SE6400-3CC03-5CD3 | 6SE6430-2AD31-5CA0 | 6SE6400-0BE00-0AA0 |
| **0450-2D-28** | - | 6SE6400-3CC04-4DD0 | 6SE6430-2AD31-8DA0 | 6SE6400-0BE00-0AA0 |
| **0450-2D-30** | - | 6SE6400-3CC04-4DD0 | 6SE6430-2AD32-2DA0 | 6SE6400-0BE00-0AA0 |

# RZM 15-0500

## Technical Data

**Please note coloured area!**

- all types suitable
- do not use in this area

**Impeller Data**

| | | | |
|---|---|---|---|
| Impeller diameter | $D_r$ | 510 | mm |
| Number of blades | z | 12 | |
| Moment of Inertia | J | 0.9 | kgm² |

**Impeller Data**

| | | | |
|---|---|---|---|
| Impeller weight | m | 19.9 | kg |
| Density of media | $\rho_1$ | 1.2 | kg/m³ |

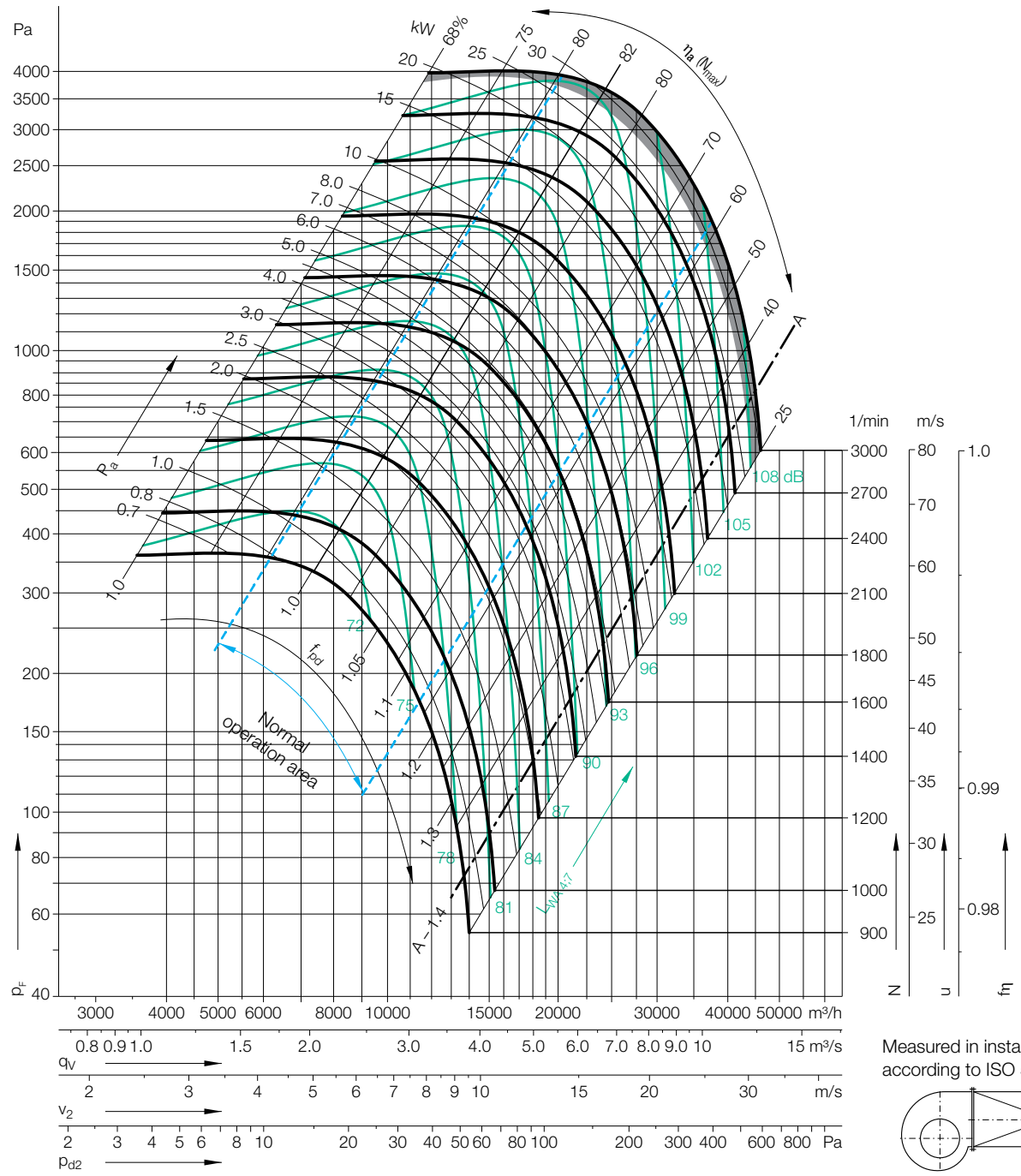


Measured in installation B according to ISO 5801:

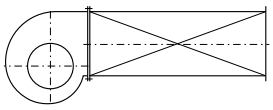

## Determination of the Octave level

Relative sound power level for **inlet side** $L_{Wrel7}$ at octave band correction factors $f_c$.

| Speed | Duty point | 63 | 125 | 250 | 500 | 1000 | 2000 | 4000 | 8000 | Hz |
|---|---|---|---|---|---|---|---|---|---|---|
| ≤1498 1/min | ≤0.8 $q_{Vopt}$ | 0 | 2 | 0 | -3 | -6 | -9 | -12 | -19 | dB |
| | >0.8-1.2 $q_{Vopt}$ | -2 | 1 | -2 | -3 | -6 | -8 | -14 | -20 | dB |
| | >1.2-1.6 $q_{Vopt}$ | -3 | 0 | -1 | -3 | -6 | -8 | -14 | -21 | dB |
| | >1.6 $q_{Vopt}$ | -5 | -3 | -3 | -3 | -6 | -7 | -13 | -21 | dB |
| **Speed** | **Duty point** | **63** | **125** | **250** | **500** | **1000** | **2000** | **4000** | **8000** | **Hz** |
| >1498 1/min | ≤0.8 $q_{Vopt}$ | -2 | -1 | -3 | -1 | -6 | -10 | -15 | -21 | dB |
| | >0.8-1.2 $q_{Vopt}$ | -7 | -4 | -5 | -1 | -6 | -9 | -14 | -21 | dB |
| | >1.2-1.6 $q_{Vopt}$ | -10 | -7 | -8 | -1 | -5 | -8 | -13 | -21 | dB |
| | >1.6 $q_{Vopt}$ | -10 | -8 | -8 | -2 | -6 | -8 | -11 | -18 | dB |

Relative sound power level for **discharge side** $L_{Wrel4}$ at octave band correction factors $f_c$.

| 63 | 125 | 250 | 500 | 1000 | 2000 | 4000 | 8000 | Hz |
|---|---|---|---|---|---|---|---|---|
| 13 | 7 | 4 | -3 | -8 | -14 | -17 | -25 | dB |
| 10 | 5 | 3 | -2 | -7 | -13 | -17 | -25 | dB |
| 7 | 2 | 2 | -2 | -6 | -12 | -18 | -27 | dB |
| 5 | 1 | 1 | -2 | -6 | -10 | -17 | -27 | dB |
| **63** | **125** | **250** | **500** | **1000** | **2000** | **4000** | **8000** | **Hz** |
| 11 | 4 | 2 | 0 | -7 | -12 | -17 | -24 | dB |
| 7 | 1 | -2 | -3 | -6 | -10 | -15 | -23 | dB |
| 3 | -2 | -4 | -3 | -5 | -9 | -14 | -23 | dB |
| 2 | -3 | -5 | -3 | -5 | -9 | -12 | -21 | dB |

# RZM 15-0500

## Technical Data

| RZM 15- | Nominal motor power kW | Poles | Motor size | Motor voltage V | Phases | Nominal frequency Hz | Connection | Nominal motor current A | Nominal motor speed 1/min | Max. fan speed 1/min | Max. operating frequency Hz | Weight kg |
|---|---|---|---|---|---|---|---|---|---|---|---|---|
| **0500-4D-19** | 4.0 | 4 | 112M | 400 | 3~ | 50 | △ | 8.2 | 1435 | 1470 | 51 | 205 |
| **0500-4D-21** | 5.5 | 4 | 132Sa | 400 | 3~ | 50 | △ | 11.4 | 1450 | 1630 | 56 | 234 |
| **0500-4D-23** | 7.5 | 4 | 132Ma | 400 | 3~ | 50 | △ | 15.4 | 1450 | 1820 | 62 | 234 |
| **0500-4D-26** | 11.0 | 4 | 160Ma | 400 | 3~ | 50 | △ | 22.0 | 1460 | 2070 | 70 | 298 |
| **0500-4D-28** | 15.0 | 4 | 160L | 400 | 3~ | 50 | △ | 30.0 | 1460 | 2300 | 78 | 298 |
| **0500-4W-30** | 18.5 | 4 | 180M | 400 | 3~ | 50 | △ | 35.0 | 1465 | 2470 | 84 | 336 |
| **0500-4W-31** | 22.0 | 4 | 180L | 400 | 3~ | 50 | △ | 41.5 | 1465 | 2610 | 89 | 336 |

**Motor code:**
- W = Asynchronous motor (efficiency class IE2)
- D = Asynchronous motor

## Dimensions in mm, subject to change.

RZM 15-0500

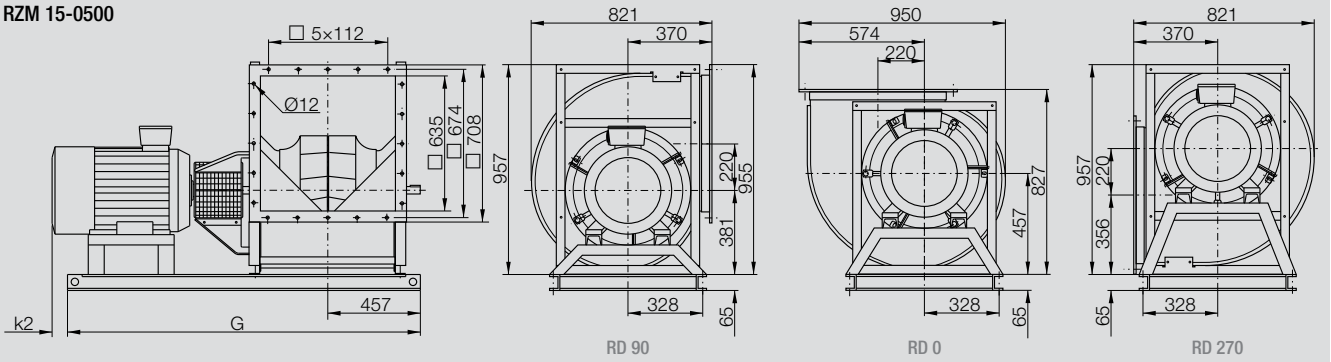


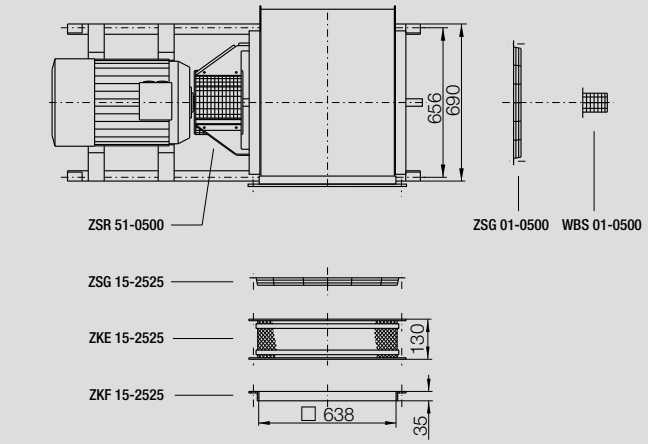


| Motor | G | k2 |
|---|---|---|
| **112** | 1342 | – |
| **132** | 1431 | – |
| **160** | 1568 | – |
| **180** | 1568 | 27 |

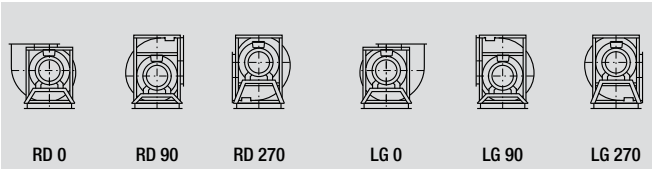


## Accessories

| RZM 15- | Frequency Inverter Unit MM420 for 3~ | Line Choke for 3~ | Frequency inverter 6SE6430- | Control Panel for frequency inverter 6SE6420- and 6SE6430- |
|---|---|---|---|---|
| **0500-4D-19** | MM420 3AC 400V 4.00KW EMV B | 6SE6400-3CC01-4BD3 | - | - |
| **0500-4D-21** | MM420 3AC 400V 5.50KW EMV B | 6SE6400-3CC02-2CD3 | - | - |
| **0500-4D-23** | MM420 3AC 400V 7.50KW EMV B | 6SE6400-3CC02-2CD3 | - | - |
| **0500-4D-26** | MM420 3AC 400V 11.0KW EMV B | 6SE6400-3CC02-5CD3 | - | - |
| **0500-4D-28** | - | 6SE6400-3CC03-5CD3 | 6SE6430-2AD31-5CA0 | 6SE6400-0BE00-0AA0 |
| **0500-4W-30** | - | 6SE6400-3CC04-4DD0 | 6SE6430-2AD31-8DA0 | 6SE6400-0BE00-0AA0 |
| **0500-4W-31** | - | 6SE6400-3CC04-4DD0 | 6SE6430-2AD32-2DA0 | 6SE6400-0BE00-0AA0 |

# RZM 15-0560

## Technical Data

**Please note coloured area!**

- ☐ all types suitable
- ■ do not use in this area

**Impeller Data**

| | | | |
|---|---|---|---|
| Impeller diameter | $D_r$ | 570 | mm |
| Number of blades | z | 12 | |
| Moment of Inertia | J | 1.7 | kgm² |

**Impeller Data**

| | | | |
|---|---|---|---|
| Impeller weight | m | 30 | kg |
| Density of media | $\rho_1$ | 1.2 | kg/m³ |

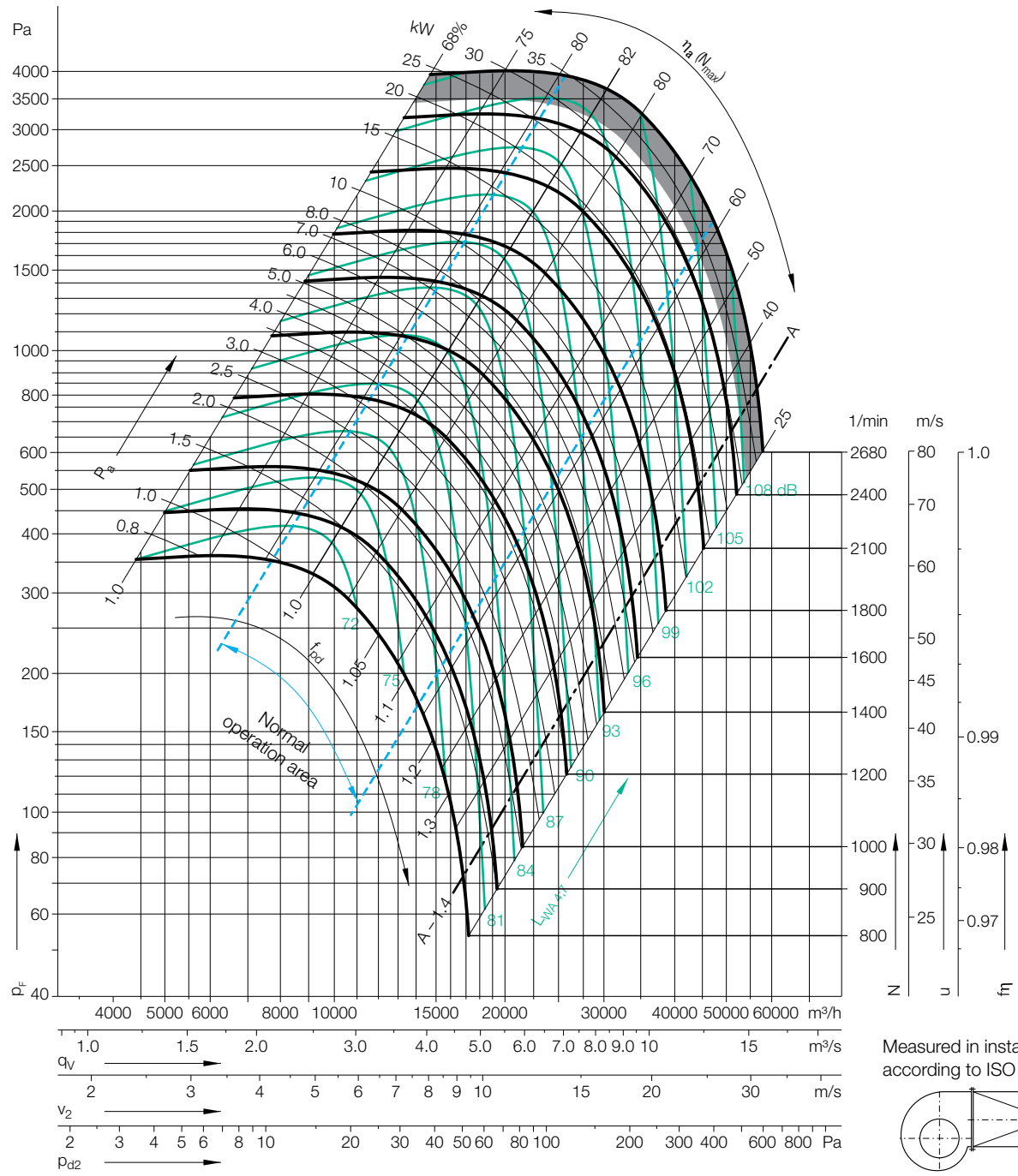


Measured in installation B according to ISO 5801:

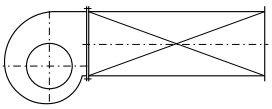

## Determination of the Octave level

Relative sound power level for **inlet side** $L_{Wrel7}$ at octave band correction factors $f_c$.

| Speed | Duty point | 63 | 125 | 250 | 500 | 1000 | 2000 | 4000 | 8000 | Hz |
|---|---|---|---|---|---|---|---|---|---|---|
| ≤1340 1/min | ≤0.8 $q_{Vopt}$ | 0 | 2 | 0 | -3 | -6 | -9 | -12 | -19 | dB |
| | >0.8-1.2 $q_{Vopt}$ | -2 | 1 | -2 | -3 | -6 | -8 | -14 | -20 | dB |
| | >1.2-1.6 $q_{Vopt}$ | -3 | 0 | -1 | -3 | -6 | -8 | -14 | -21 | dB |
| | >1.6 $q_{Vopt}$ | -5 | -3 | -3 | -3 | -6 | -7 | -13 | -21 | dB |
| **Speed** | **Duty point** | **63** | **125** | **250** | **500** | **1000** | **2000** | **4000** | **8000** | **Hz** |
| >1340 1/min | ≤0.8 $q_{Vopt}$ | -2 | -1 | -3 | -1 | -6 | -10 | -15 | -21 | dB |
| | >0.8-1.2 $q_{Vopt}$ | -7 | -4 | -5 | -1 | -6 | -9 | -14 | -21 | dB |
| | >1.2-1.6 $q_{Vopt}$ | -10 | -7 | -8 | -1 | -5 | -8 | -13 | -21 | dB |
| | >1.6 $q_{Vopt}$ | -10 | -8 | -8 | -2 | -6 | -8 | -11 | -18 | dB |

Relative sound power level for **discharge side** $L_{Wrel4}$ at octave band correction factors $f_c$.

| 63 | 125 | 250 | 500 | 1000 | 2000 | 4000 | 8000 | Hz |
|---|---|---|---|---|---|---|---|---|
| 13 | 7 | 4 | -3 | -8 | -14 | -17 | -25 | dB |
| 10 | 5 | 3 | -2 | -7 | -13 | -17 | -25 | dB |
| 7 | 2 | 2 | -2 | -6 | -12 | -18 | -27 | dB |
| 5 | 1 | 1 | -2 | -6 | -10 | -17 | -27 | dB |
| **63** | **125** | **250** | **500** | **1000** | **2000** | **4000** | **8000** | **Hz** |
| 11 | 4 | 2 | 0 | -7 | -12 | -17 | -24 | dB |
| 7 | 1 | -2 | -3 | -6 | -10 | -15 | -23 | dB |
| 3 | -2 | -4 | -3 | -5 | -9 | -14 | -23 | dB |
| 2 | -3 | -5 | -3 | -5 | -9 | -12 | -21 | dB |

# RZM 15-0560

## Technical Data

| RZM 15- | Nominal motor power kW | Poles | Motor size | Motor voltage V | Phases | Nominal frequency Hz | Connection | Nominal motor current A | Nominal motor speed 1/min | Max. fan speed 1/min | Max. operating frequency Hz | Weight kg |
|---|---|---|---|---|---|---|---|---|---|---|---|---|
| **0560-4D-23** | 7.5 | 4 | 132Ma | 400 | 3~ | 50 | △ | 15.4 | 1450 | 1500 | 51 | 276 |
| **0560-4D-26** | 11.0 | 4 | 160Ma | 400 | 3~ | 50 | △ | 22.0 | 1460 | 1710 | 58 | 343 |
| **0560-4D-28** | 15.0 | 4 | 160L | 400 | 3~ | 50 | △ | 30.0 | 1460 | 1900 | 65 | 343 |
| **0560-4W-30** | 18.5 | 4 | 180M | 400 | 3~ | 50 | △ | 35.0 | 1465 | 2040 | 69 | 380 |
| **0560-4W-31** | 22.0 | 4 | 180L | 400 | 3~ | 50 | △ | 41.5 | 1465 | 2160 | 73 | 380 |
| **0560-4W-33** | 30.0 | 4 | 200L | 400 | 3~ | 50 | △ | 56.0 | 1470 | 2400 | 81 | 518 |

**Motor code:**
- W = Asynchronous motor (efficiency class IE2)
- D = Asynchronous motor

## Dimensions in mm, subject to change.

RZM 15-0560

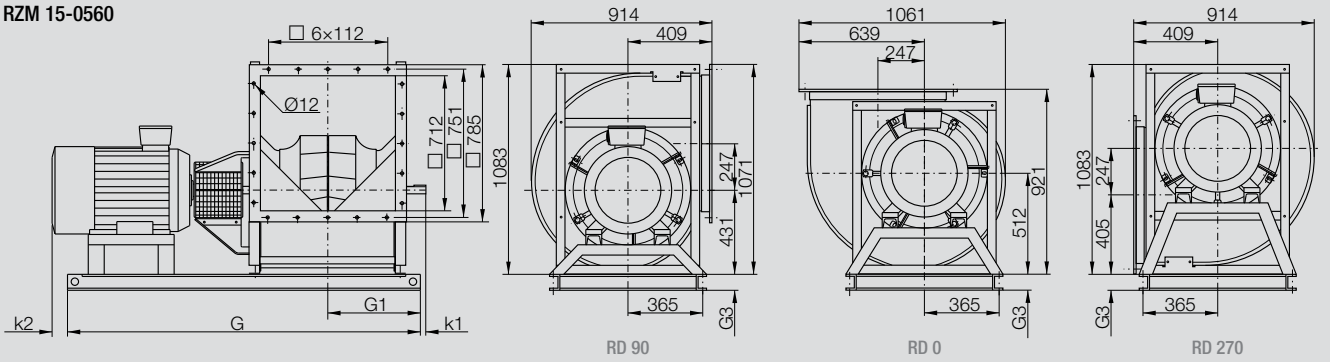


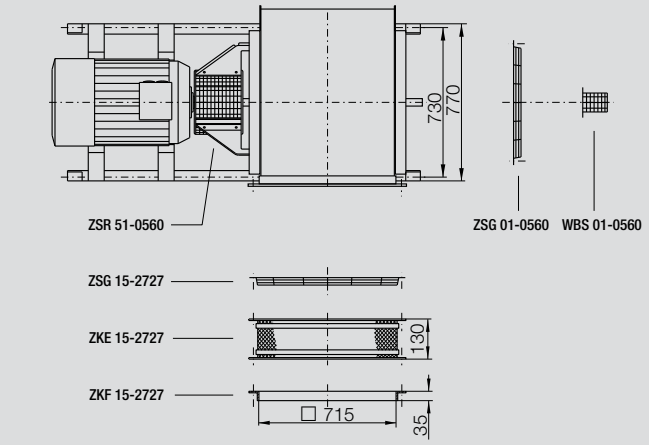


| Motor | G | G1 | G3 | k1 | k2 |
|---|---|---|---|---|---|
| **132** | 1540 | 497 | 80 | 15 | – |
| **160** | 1734 | 497 | 80 | 15 | – |
| **180** | 1734 | 497 | 80 | 15 | – |
| **200** | 1774 | 518 | 100 | – | 1 |

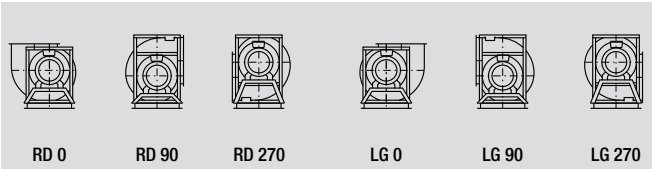


## Accessories

| RZM 15- | Frequency Inverter Unit MM420 for 3~ | Line Choke for 3~ | Frequency inverter 6SE6430- | Control Panel for frequency inverter 6SE6420- and 6SE6430- |
|---|---|---|---|---|
| **0560-4D-23** | MM420 3AC 400V 7.50KW EMV B | 6SE6400-3CC02-2CD3 | - | - |
| **0560-4D-26** | MM420 3AC 400V 11.0KW EMV B | 6SE6400-3CC02-5CD3 | - | - |
| **0560-4D-28** | - | 6SE6400-3CC03-5CD3 | 6SE6430-2AD31-5CA0 | 6SE6400-0BE00-0AA0 |
| **0560-4W-30** | - | 6SE6400-3CC04-4DD0 | 6SE6430-2AD31-8DA0 | 6SE6400-0BE00-0AA0 |
| **0560-4W-31** | - | 6SE6400-3CC04-4DD0 | 6SE6430-2AD32-2DA0 | 6SE6400-0BE00-0AA0 |
| **0560-4W-33** | - | 6SE6400-3CC05-2DD0 | 6SE6430-2AD33-0DA0 | 6SE6400-0BE00-0AA0 |

# RZM 15-0630
# RZM 18-0630

## Technical Data

**Please note coloured area!**

- all types suitable
- RZM 18 only
- do not use in this area

**Impeller Data**

| | | | |
|---|---|---|---|
| Impeller diameter | $D_r$ | 640 | mm |
| Number of blades | z | 12 | |
| Moment of Inertia | J | 2.4 | kgm² |

**Impeller Data**

| | | | |
|---|---|---|---|
| Impeller weight | m | 38 | kg |
| Density of media | $\rho_1$ | 1.2 | kg/m³ |

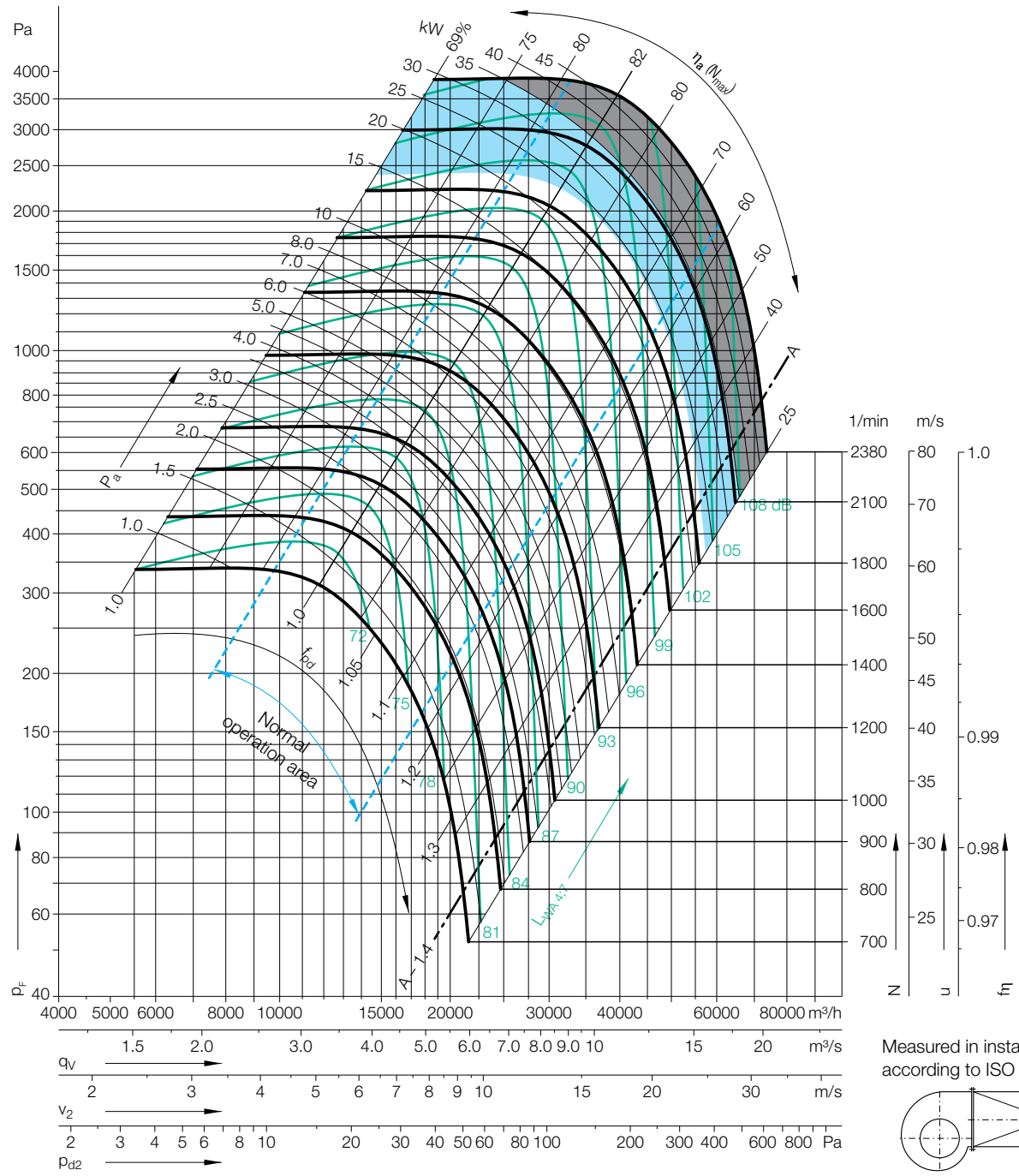


Measured in installation B according to ISO 5801:

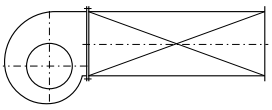

## Determination of the Octave level

Relative sound power level for **inlet side** $L_{Wrel7}$ at octave band correction factors $f_c$.

| Speed | Duty point | 63 | 125 | 250 | 500 | 1000 | 2000 | 4000 | 8000 | Hz |
|---|---|---|---|---|---|---|---|---|---|---|
| ≤1194 1/min | ≤0.8 $q_{Vopt}$ | 0 | 2 | 0 | -3 | -6 | -9 | -12 | -19 | dB |
| | >0.8-1.2 $q_{Vopt}$ | -2 | 1 | -2 | -3 | -6 | -8 | -14 | -20 | dB |
| | >1.2-1.6 $q_{Vopt}$ | -3 | 0 | -1 | -3 | -6 | -8 | -14 | -21 | dB |
| | >1.6 $q_{Vopt}$ | -5 | -3 | -3 | -3 | -6 | -7 | -13 | -21 | dB |
| **Speed** | **Duty point** | **63** | **125** | **250** | **500** | **1000** | **2000** | **4000** | **8000** | **Hz** |
| >1194 1/min | ≤0.8 $q_{Vopt}$ | -2 | -1 | -3 | -1 | -6 | -10 | -15 | -21 | dB |
| | >0.8-1.2 $q_{Vopt}$ | -7 | -4 | -5 | -1 | -6 | -9 | -14 | -21 | dB |
| | >1.2-1.6 $q_{Vopt}$ | -10 | -7 | -8 | -1 | -5 | -8 | -13 | -21 | dB |
| | >1.6 $q_{Vopt}$ | -10 | -8 | -8 | -2 | -6 | -8 | -11 | -18 | dB |

Relative sound power level for **discharge side** $L_{Wrel4}$ at octave band correction factors $f_c$.

| 63 | 125 | 250 | 500 | 1000 | 2000 | 4000 | 8000 | Hz |
|---|---|---|---|---|---|---|---|---|
| 13 | 7 | 4 | -3 | -8 | -14 | -17 | -25 | dB |
| 10 | 5 | 3 | -2 | -7 | -13 | -17 | -25 | dB |
| 7 | 2 | 2 | -2 | -6 | -12 | -18 | -27 | dB |
| 5 | 1 | 1 | -2 | -6 | -10 | -17 | -27 | dB |
| **63** | **125** | **250** | **500** | **1000** | **2000** | **4000** | **8000** | **Hz** |
| 11 | 4 | 2 | 0 | -7 | -12 | -17 | -24 | dB |
| 7 | 1 | -2 | -3 | -6 | -10 | -15 | -23 | dB |
| 3 | -2 | -4 | -3 | -5 | -9 | -14 | -23 | dB |
| 2 | -3 | -5 | -3 | -5 | -9 | -12 | -21 | dB |

# RZM 15-0630
# RZM 18-0630

## Technical Data

| RZM 15- | Nominal motor power kW | Poles | Motor size | Motor voltage V | Phases | Nominal frequency Hz | Connection | Nominal motor current A | Nominal motor speed 1/min | Max. fan speed 1/min | Max. operating frequency Hz | Weight kg |
|---|---|---|---|---|---|---|---|---|---|---|---|---|
| **0630-6W-23** | 4.0 | 6 | 132M | 400 | 3~ | 50 | △ | 8.7 | 970 | 1000 | 51 | 312 |
| **0630-6W-24** | 5.5 | 6 | 132M | 400 | 3~ | 50 | △ | 12.0 | 970 | 1110 | 57 | 312 |
| **0630-6W-26** | 7.5 | 6 | 160M | 400 | 3~ | 50 | △ | 16.1 | 975 | 1235 | 63 | 386 |
| **0630-4D-28** | 15.0 | 4 | 160L | 400 | 3~ | 50 | △ | 30.0 | 1460 | 1540 | 52 | 312 |
| **0630-4W-30** | 18.5 | 4 | 180M | 400 | 3~ | 50 | △ | 35.0 | 1465 | 1660 | 56 | 424 |
| **0630-4W-31** | 22.0 | 4 | 180L | 400 | 3~ | 50 | △ | 41.5 | 1465 | 1760 | 60 | 424 |
| **RZM 18-** | **kW** | | | **V** | | **Hz** | | **A** | **1/min** | **1/min** | **Hz** | **kg** |
| **0630-4W-34** | 30.0 | 4 | 200L | 400 | 3~ | 50 | △ | 56.0 | 1470 | 1960 | 66 | 480 |
| **0630-4W-36** | 37.0 | 4 | 225S | 400 | 3~ | 50 | △ | 65.0 | 1470 | 2100 | 71 | 540 |

**Motor code:**
- W = Asynchronous motor (efficiency class IE2)
- D = Asynchronous motor

## Dimensions in mm, subject to change.

RZM 15-0630
RZM 18-0630

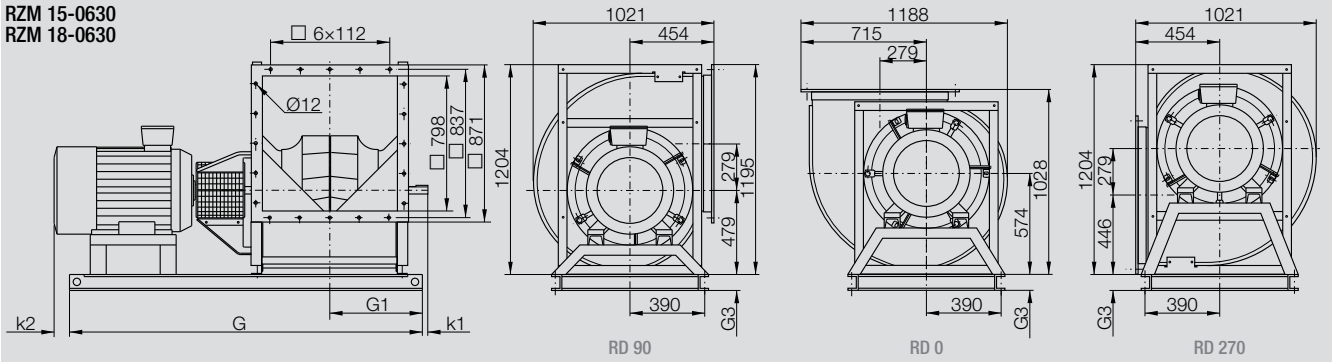


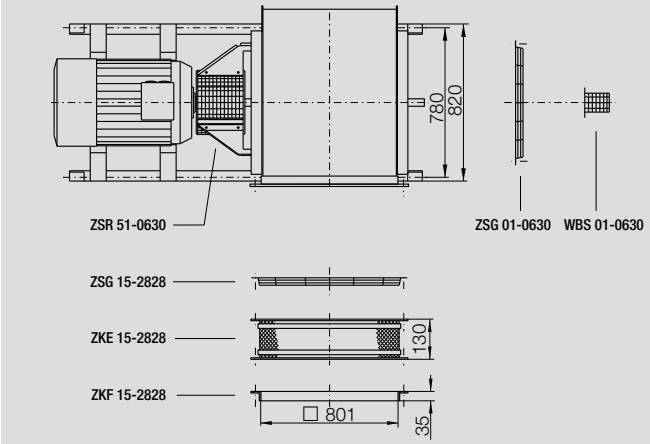


| Motor | G | G1 | G3 | k1 | k2 |
|---|---|---|---|---|---|
| **132** | 1629 | 542 | 80 | 16 | – |
| **160** | 1766 | 542 | 80 | 16 | – |
| **180** | 1766 | 542 | 80 | 16 | 28 |
| **200** | 1940 | 561 | 100 | 51 | – |
| **225** | 1964 | 562 | 100 | 51 | – |

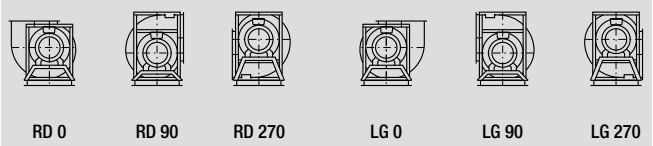


## Accessories

| RZM 15- | Frequency Inverter Unit MM420 for 3~ | Line Choke for 3~ | Frequency inverter 6SE6430- | Control Panel for frequency inverter 6SE6420- and 6SE6430- |
|---|---|---|---|---|
| **0630-6W-23** | MM420 3AC 400V 4.00KW EMV B | 6SE6400-3CC01-4BD3 | - | - |
| **0630-6W-24** | MM420 3AC 400V 5.50KW EMV B | 6SE6400-3CC02-2CD3 | - | - |
| **0630-6W-26** | MM420 3AC 400V 7.50KW EMV B | 6SE6400-3CC02-2CD3 | - | - |
| **0630-4D-28** | - | 6SE6400-3CC03-5CD3 | 6SE6430-2AD31-5CA0 | 6SE6400-0BE00-0AA0 |
| **0630-4W-30** | - | 6SE6400-3CC04-4DD0 | 6SE6430-2AD31-8DA0 | 6SE6400-0BE00-0AA0 |
| **0630-4W-31** | - | 6SE6400-3CC04-4DD0 | 6SE6430-2AD32-2DA0 | 6SE6400-0BE00-0AA0 |
| **RZM 18-** | | | | |
| **0630-4W-34** | - | 6SE6400-3CC05-2DD0 | 6SE6430-2AD33-0DA0 | 6SE6400-0BE00-0AA0 |
| **0630-4W-36** | - | 6SE6400-3CC08-3ED0 | 6SE6430-2AD33-7EA0 | 6SE6400-0BE00-0AA0 |

# RZM 15-0710
# RZM 18-0710

## Technical Data

**Please note coloured area!**

- all types suitable
- RZM 18 only
- do not use in this area

| Impeller Data | | | |
|---|---|---|---|
| Impeller diameter | $D_r$ | 718 | mm |
| Number of blades | z | 12 | |
| Moment of Inertia | J | 4.8 | kgm² |

| Impeller Data | | | |
|---|---|---|---|
| Impeller weight | m | 52 | kg |
| Density of media | $\rho_1$ | 1.2 | kg/m³ |

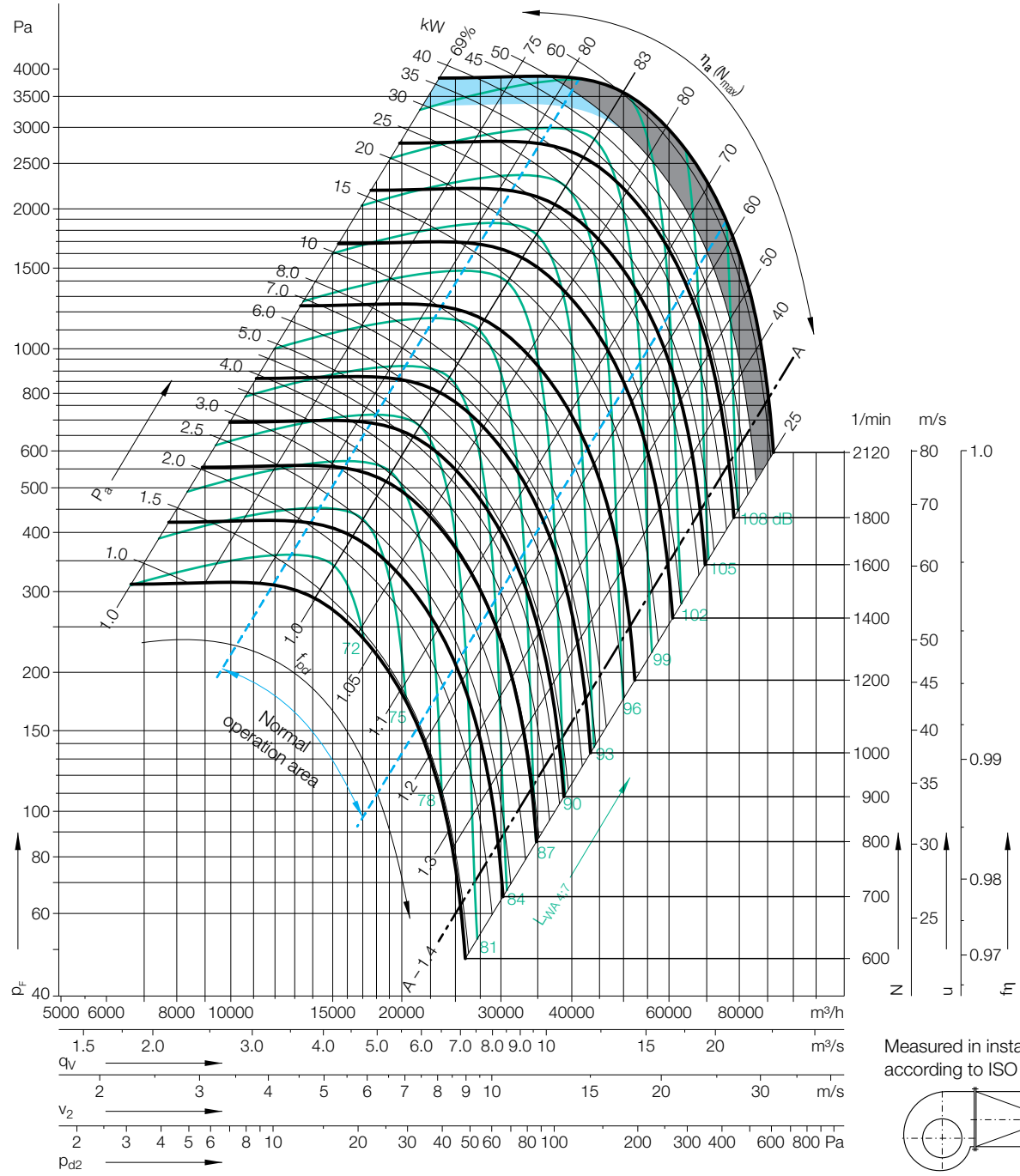


Measured in installation B according to ISO 5801:

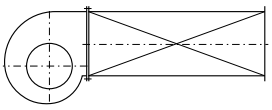

## Determination of the Octave level

Relative sound power level for **inlet side** $L_{Wrel7}$ at octave band correction factors $f_c$.

| Speed | Duty point | 63 | 125 | 250 | 500 | 1000 | 2000 | 4000 | 8000 | Hz |
|---|---|---|---|---|---|---|---|---|---|---|
| ≤1064 1/min | ≤0.8 $q_{Vopt}$ | 0 | 2 | 0 | -3 | -6 | -9 | -12 | -19 | dB |
| | >0.8-1.2 $q_{Vopt}$ | -2 | 1 | -2 | -3 | -6 | -8 | -14 | -20 | dB |
| | >1.2-1.6 $q_{Vopt}$ | -3 | 0 | -1 | -3 | -6 | -8 | -14 | -21 | dB |
| | >1.6 $q_{Vopt}$ | -5 | -3 | -3 | -3 | -6 | -7 | -13 | -21 | dB |
| **Speed** | **Duty point** | **63** | **125** | **250** | **500** | **1000** | **2000** | **4000** | **8000** | **Hz** |
| >1064 1/min | ≤0.8 $q_{Vopt}$ | -2 | -1 | -3 | -1 | -6 | -10 | -15 | -21 | dB |
| | >0.8-1.2 $q_{Vopt}$ | -7 | -4 | -5 | -1 | -6 | -9 | -14 | -21 | dB |
| | >1.2-1.6 $q_{Vopt}$ | -10 | -7 | -8 | -1 | -5 | -8 | -13 | -21 | dB |
| | >1.6 $q_{Vopt}$ | -10 | -8 | -8 | -2 | -6 | -8 | -11 | -18 | dB |

Relative sound power level for **discharge side** $L_{Wrel4}$ at octave band correction factors $f_c$.

| 63 | 125 | 250 | 500 | 1000 | 2000 | 4000 | 8000 | Hz |
|---|---|---|---|---|---|---|---|---|
| 13 | 7 | 4 | -3 | -8 | -14 | -17 | -25 | dB |
| 10 | 5 | 3 | -2 | -7 | -13 | -17 | -25 | dB |
| 7 | 2 | 2 | -2 | -6 | -12 | -18 | -27 | dB |
| 5 | 1 | 1 | -2 | -6 | -10 | -17 | -27 | dB |
| **63** | **125** | **250** | **500** | **1000** | **2000** | **4000** | **8000** | **Hz** |
| 11 | 4 | 2 | 0 | -7 | -12 | -17 | -24 | dB |
| 7 | 1 | -2 | -3 | -6 | -10 | -15 | -23 | dB |
| 3 | -2 | -4 | -3 | -5 | -9 | -14 | -23 | dB |
| 2 | -3 | -5 | -3 | -5 | -9 | -12 | -21 | dB |

# RZM 15-0710
# RZM 18-0710

## Technical Data

| RZM 15- | Nominal motor power kW | Poles | Motor size | Motor voltage V | Phases | Nominal frequency Hz | Connection | Nominal motor current A | Nominal motor speed 1/min | Max. fan speed 1/min | Max. operating frequency Hz | Weight kg |
|---|---|---|---|---|---|---|---|---|---|---|---|---|
| **0710-6W-26** | 7.5 | 6 | 160M | 400 | 3~ | 50 | △ | 16.1 | 975 | 1015 | 52 | 453 |
| **0710-6W-28** | 11.0 | 6 | 160L | 400 | 3~ | 50 | △ | 22.5 | 975 | 1160 | 59 | 453 |
| **0710-6W-31** | 15.0 | 6 | 180L | 400 | 3~ | 50 | △ | 31.0 | 975 | 1290 | 66 | 491 |
| **0710-4W-31** | 22.0 | 4 | 180L | 400 | 3~ | 50 | △ | 41.5 | 1465 | 1445 | 49 | 491 |
| **0710-4W-33** | 30.0 | 4 | 200L | 400 | 3~ | 50 | △ | 56.0 | 1470 | 1610 | 54 | 618 |
| **0710-4D-36** | 37.0 | 4 | 225S | 400 | 3~ | 50 | △ | 69.0 | 1475 | 1730 | 58 | 689 |
| **0710-4D-37** | 45.0 | 4 | 225M | 400 | 3~ | 50 | △ | 82.0 | 1475 | 1850 | 62 | 689 |
| **RZM 18-** | **kW** | | | **V** | | **Hz** | | **A** | **1/min** | **1/min** | **Hz** | **kg** |
| **0710-4D-39** | 55.0 | 4 | 250M | 400 | 3~ | 50 | △ | 101.0 | 1480 | 1980 | 66 | 828 |

**Motor code:**
- W = Asynchronous motor (efficiency class IE2)
- D = Asynchronous motor

## Dimensions in mm, subject to change.

RZM 15-0710
RZM 18-0710

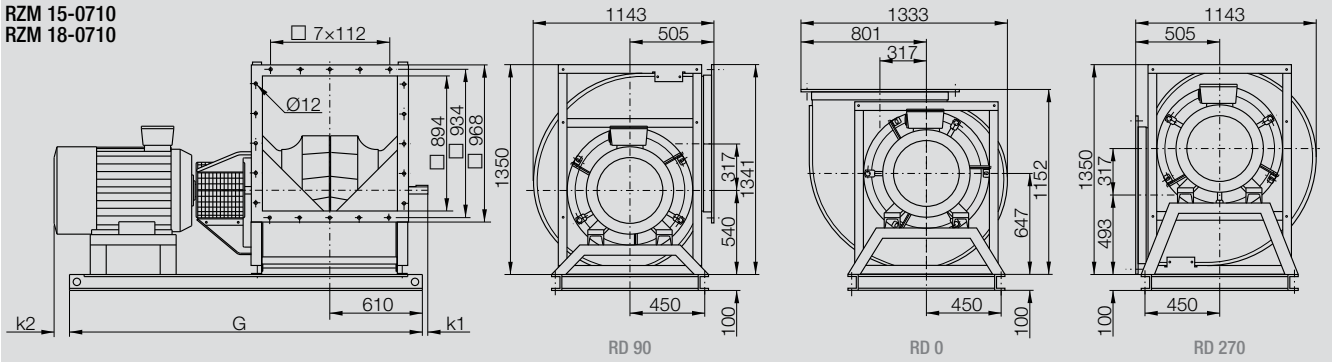


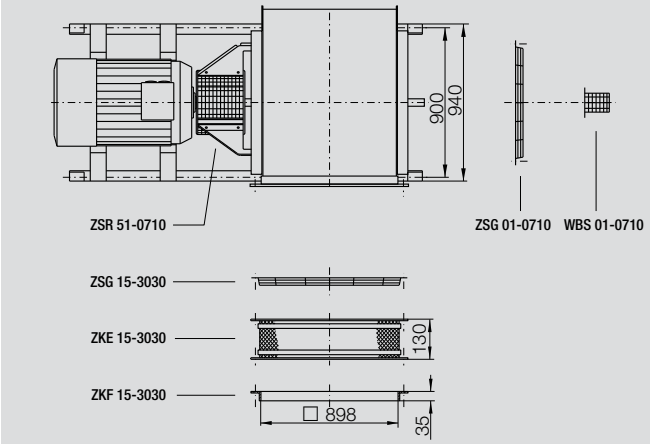


| Motor | G | k1 | k2 |
|---|---|---|---|
| **160** | 1936 | 31 | – |
| **180** | 1936 | 31 | 6 |
| **200** | 2039 | 31 | 44 |
| **225** | 2039 | 31 | 25 |
| **250** | 2185 | 92 | 39 |

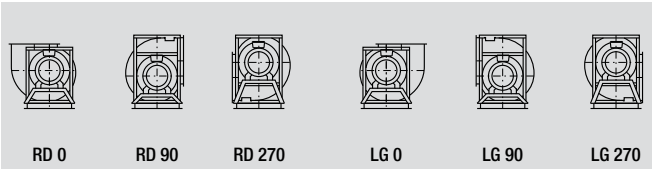


## Accessories

| RZM 15- | Frequency Inverter Unit MM420 for 3~ | Line Choke for 3~ | Frequency inverter 6SE6430- | Control Panel for frequency inverter 6SE6420- and 6SE6430- |
|---|---|---|---|---|
| **0710-6W-26** | MM420 3AC 400V 7.50KW EMV B | 6SE6400-3CC02-2CD3 | - | - |
| **0710-6W-28** | MM420 3AC 400V 11.0KW EMV B | 6SE6400-3CC02-5CD3 | - | - |
| **0710-6W-31** | - | 6SE6400-3CC04-4DD0 | 6SE6430-2AD31-8DA0 | 6SE6400-0BE00-0AA0 |
| **0710-4W-31** | - | 6SE6400-3CC04-4DD0 | 6SE6430-2AD32-2DA0 | 6SE6400-0BE00-0AA0 |
| **0710-4W-33** | - | 6SE6400-3CC05-2DD0 | 6SE6430-2AD33-0DA0 | 6SE6400-0BE00-0AA0 |
| **0710-4D-36** | - | 6SE6400-3CC08-3ED0 | 6SE6430-2AD33-7EA0 | 6SE6400-0BE00-0AA0 |
| **0710-4D-37** | - | 6SE6400-3CC08-3ED0 | 6SE6430-2AD34-5EA0 | 6SE6400-0BE00-0AA0 |
| **RZM 18-** | | | | |
| **0710-4D-39** | - | 6SE6400-3CC11-2FD0 | 6SE6430-2AD35-5FA0 | 6SE6400-0BE00-0AA0 |

# RZM 15-0800
# RZM 18-0800

## Technical Data

**Please note coloured area!**

- all types suitable
- RZM 18 only
- do not use in this area

**Impeller Data**

| | | | |
|---|---|---|---|
| Impeller diameter | $D_r$ | 808 | mm |
| Number of blades | z | 12 | |
| Moment of Inertia | J | 6.85 | kgm² |

**Impeller Data**

| | | | |
|---|---|---|---|
| Impeller weight | m | 69 | kg |
| Density of media | $\rho_1$ | 1.2 | kg/m³ |

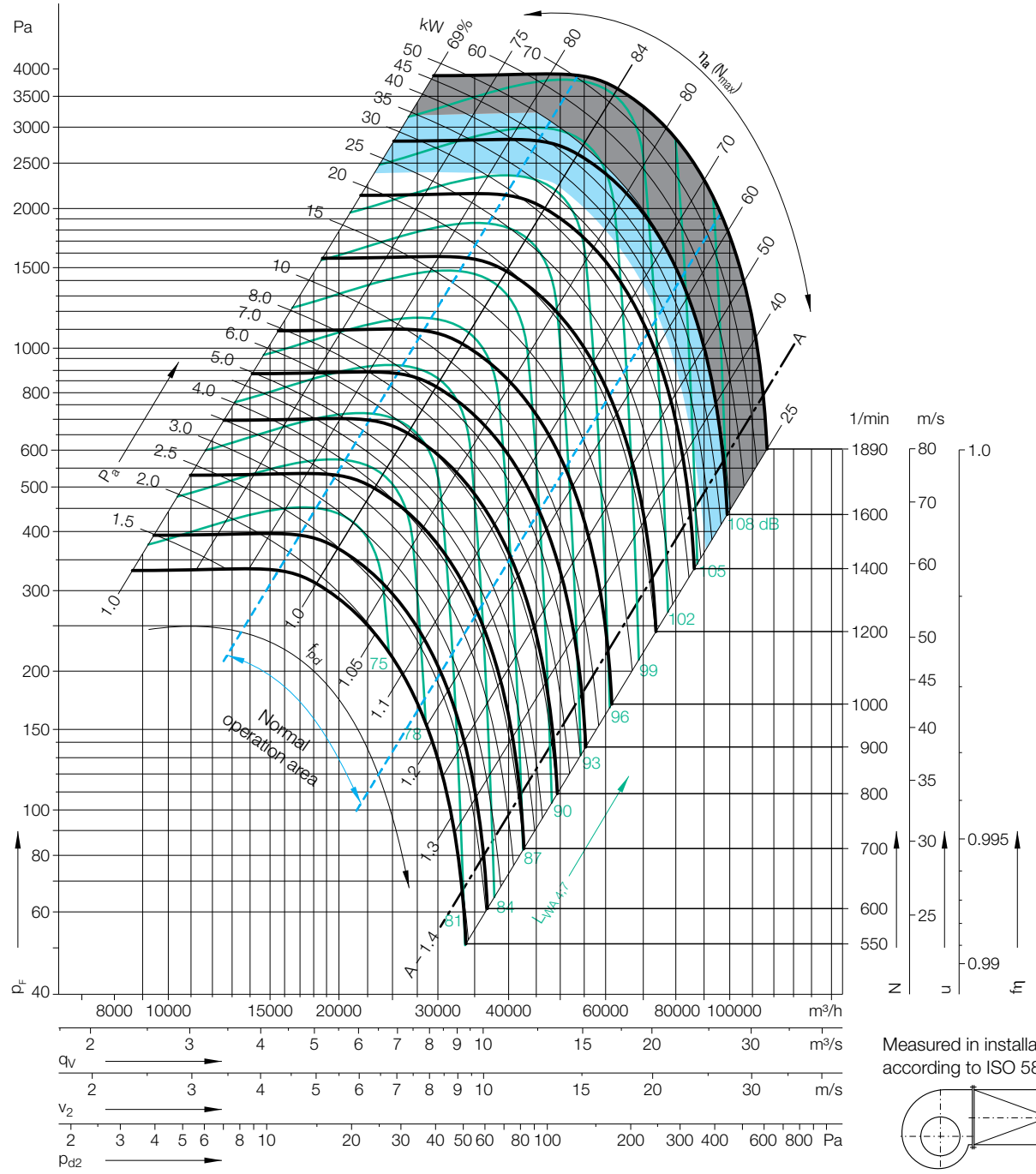


Measured in installation B according to ISO 5801:

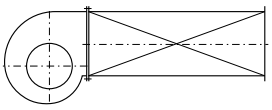

## Determination of the Octave level

Relative sound power level for **inlet side** $L_{Wrel7}$ at octave band correction factors $f_c$.

| Speed | Duty point | 63 | 125 | 250 | 500 | 1000 | 2000 | 4000 | 8000 | Hz |
|---|---|---|---|---|---|---|---|---|---|---|
| ≤945 1/min | ≤0.8 $q_{Vopt}$ | 0 | 2 | 0 | -3 | -6 | -9 | -12 | -19 | dB |
| | >0.8-1.2 $q_{Vopt}$ | -2 | 1 | -2 | -3 | -6 | -8 | -14 | -20 | dB |
| | >1.2-1.6 $q_{Vopt}$ | -3 | 0 | -1 | -3 | -6 | -8 | -14 | -21 | dB |
| | >1.6 $q_{Vopt}$ | -5 | -3 | -3 | -3 | -6 | -7 | -13 | -21 | dB |
| **Speed** | **Duty point** | **63** | **125** | **250** | **500** | **1000** | **2000** | **4000** | **8000** | **Hz** |
| >945 1/min | ≤0.8 $q_{Vopt}$ | -2 | -1 | -3 | -1 | -6 | -10 | -15 | -21 | dB |
| | >0.8-1.2 $q_{Vopt}$ | -7 | -4 | -5 | -1 | -6 | -9 | -14 | -21 | dB |
| | >1.2-1.6 $q_{Vopt}$ | -10 | -7 | -8 | -1 | -5 | -8 | -13 | -21 | dB |
| | >1.6 $q_{Vopt}$ | -10 | -8 | -8 | -2 | -6 | -8 | -11 | -18 | dB |

Relative sound power level for **discharge side** $L_{Wrel4}$ at octave band correction factors $f_c$.

| 63 | 125 | 250 | 500 | 1000 | 2000 | 4000 | 8000 | Hz |
|---|---|---|---|---|---|---|---|---|
| 13 | 7 | 4 | -3 | -8 | -14 | -17 | -25 | dB |
| 10 | 5 | 3 | -2 | -7 | -13 | -17 | -25 | dB |
| 7 | 2 | 2 | -2 | -6 | -12 | -18 | -27 | dB |
| 5 | 1 | 1 | -2 | -6 | -10 | -17 | -27 | dB |
| **63** | **125** | **250** | **500** | **1000** | **2000** | **4000** | **8000** | **Hz** |
| 11 | 4 | 2 | 0 | -7 | -12 | -17 | -24 | dB |
| 7 | 1 | -2 | -3 | -6 | -10 | -15 | -23 | dB |
| 3 | -2 | -4 | -3 | -5 | -9 | -14 | -23 | dB |
| 2 | -3 | -5 | -3 | -5 | -9 | -12 | -21 | dB |

# RZM 15-0800
# RZM 18-0800

## Technical Data

| RZM 15- | Nominal motor power kW | Poles | Motor size | Motor voltage V | Phases | Nominal frequency Hz | Connection | Nominal motor current A | Nominal motor speed 1/min | Max. fan speed 1/min | Max. operating frequency Hz | Weight kg |
|---|---|---|---|---|---|---|---|---|---|---|---|---|
| **0800-6W-28** | 11.0 | 6 | 160L | 400 | 3~ | 50 | △ | 22.5 | 975 | 960 | 49 | 524 |
| **0800-6W-31** | 15.0 | 6 | 180L | 400 | 3~ | 50 | △ | 31.0 | 975 | 1050 | 54 | 562 |
| **0800-6W-33** | 18.5 | 6 | 200L | 400 | 3~ | 50 | △ | 36.0 | 978 | 1130 | 58 | 681 |
| **0800-6W-34** | 22.0 | 6 | 200L | 400 | 3~ | 50 | △ | 42.5 | 978 | 1200 | 61 | 681 |
| **0800-6W-37** | 30.0 | 6 | 225M | 400 | 3~ | 50 | △ | 57.0 | 980 | 1330 | 67 | 751 |
| **0800-6W-39** | 37.0 | 6 | 250M | 400 | 3~ | 50 | △ | 70.0 | 982 | 1430 | 72 | 898 |
| **RZM 18-** | **kW** | | | **V** | | **Hz** | | **A** | **1/min** | **1/min** | **Hz** | **kg** |
| **0800-4D-37** | 45.0 | 4 | 225M | 400 | 3~ | 50 | △ | 82.0 | 1475 | 1510 | 51 | 865 |
| **0800-4D-39** | 55.0 | 4 | 250M | 400 | 3~ | 50 | △ | 101.0 | 1480 | 1615 | 54 | 970 |

**Motor code:**
- W = Asynchronous motor (efficiency class IE2)
- D = Asynchronous motor

## Dimensions in mm, subject to change.

RZM 15-0800
RZM 18-0800

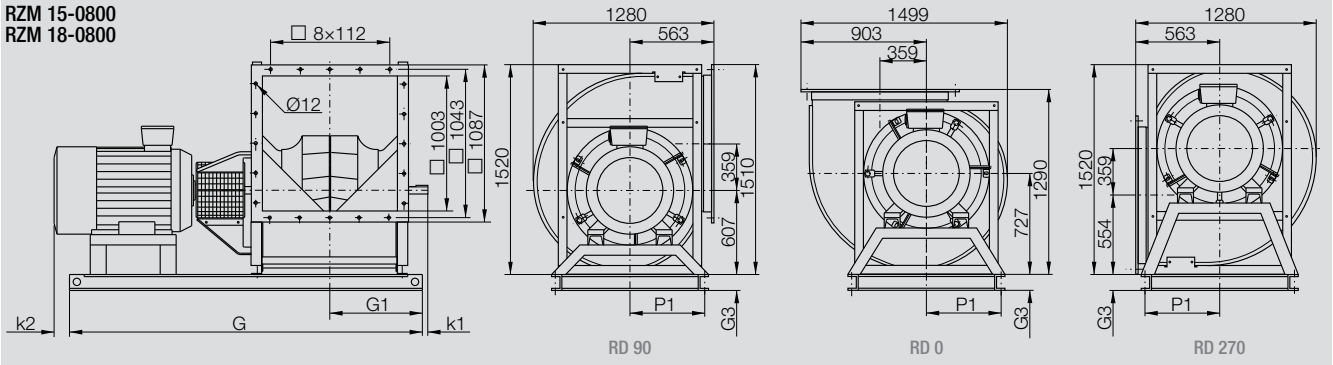


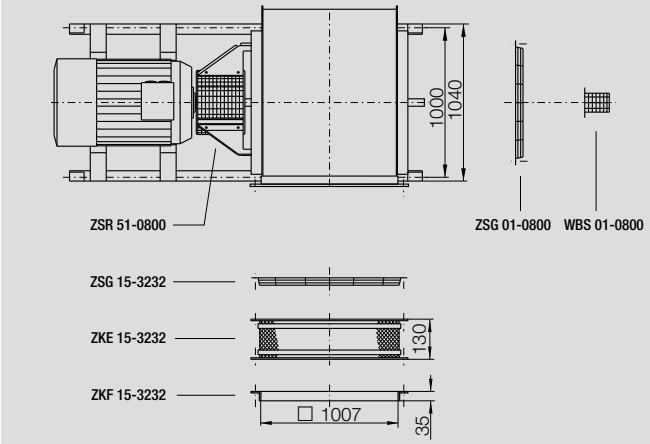


| Motor | G | G1 | G3 | k1 | k2 | P1 |
|---|---|---|---|---|---|---|
| **160** | 2046 | 665 | 100 | 30 | – | 500 |
| **180** | 2046 | 665 | 100 | 30 | – | 500 |
| **200** | 2149 | 665 | 100 | 30 | – | 500 |
| **225** | 2210 | 665 | 100 | 91 | 25 | 500 |
| **250** | 2299 | 670 | 120 | 86 | 39 | 495 |

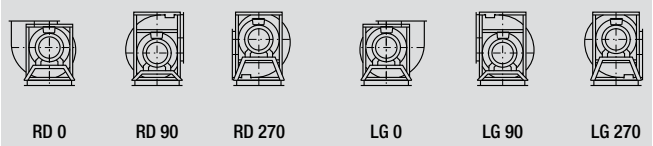


## Accessories

| RZM 15- | Frequency Inverter Unit MM420 for 3~ | Line Choke for 3~ | Frequency inverter 6SE6430- | Control Panel for frequency inverter 6SE6420- and 6SE6430- |
|---|---|---|---|---|
| **0800-6W-28** | MM420 3AC 400V 11.0KW EMV B | 6SE6400-3CC02-5CD3 | - | - |
| **0800-6W-31** | - | 6SE6400-3CC04-4DD0 | 6SE6430-2AD31-8DA0 | 6SE6400-0BE00-0AA0 |
| **0800-6W-33** | - | 6SE6400-3CC04-4DD0 | 6SE6430-2AD32-2DA0 | 6SE6400-0BE00-0AA0 |
| **0800-6W-34** | - | 6SE6400-3CC05-2DD0 | 6SE6430-2AD33-0DA0 | 6SE6400-0BE00-0AA0 |
| **0800-6W-37** | - | 6SE6400-3CC08-3ED0 | 6SE6430-2AD33-7EA0 | 6SE6400-0BE00-0AA0 |
| **0800-6W-39** | - | 6SE6400-3CC08-3ED0 | 6SE6430-2AD33-7EA0 | 6SE6400-0BE00-0AA0 |
| **RZM 18-** | | | | |
| **0800-4D-37** | - | 6SE6400-3CC08-3ED0 | 6SE6430-2AD34-5EA0 | 6SE6400-0BE00-0AA0 |
| **0800-4D-39** | - | 6SE6400-3CC11-2FD0 | 6SE6430-2AD35-5FA0 | 6SE6400-0BE00-0AA0 |

# RZM 15-0900
# RZM 18-0900

## Technical Data

**Please note coloured area!**

- all types suitable
- RZM 18 only
- do not use in this area

| Impeller Data | | | |
|---|---|---|---|
| Impeller diameter | $D_r$ | 905 | mm |
| Number of blades | z | 12 | |
| Moment of Inertia | J | 15.5 | kgm² |

| Impeller Data | | | |
|---|---|---|---|
| Impeller weight | m | 109 | kg |
| Density of media | $\rho_1$ | 1.2 | kg/m³ |

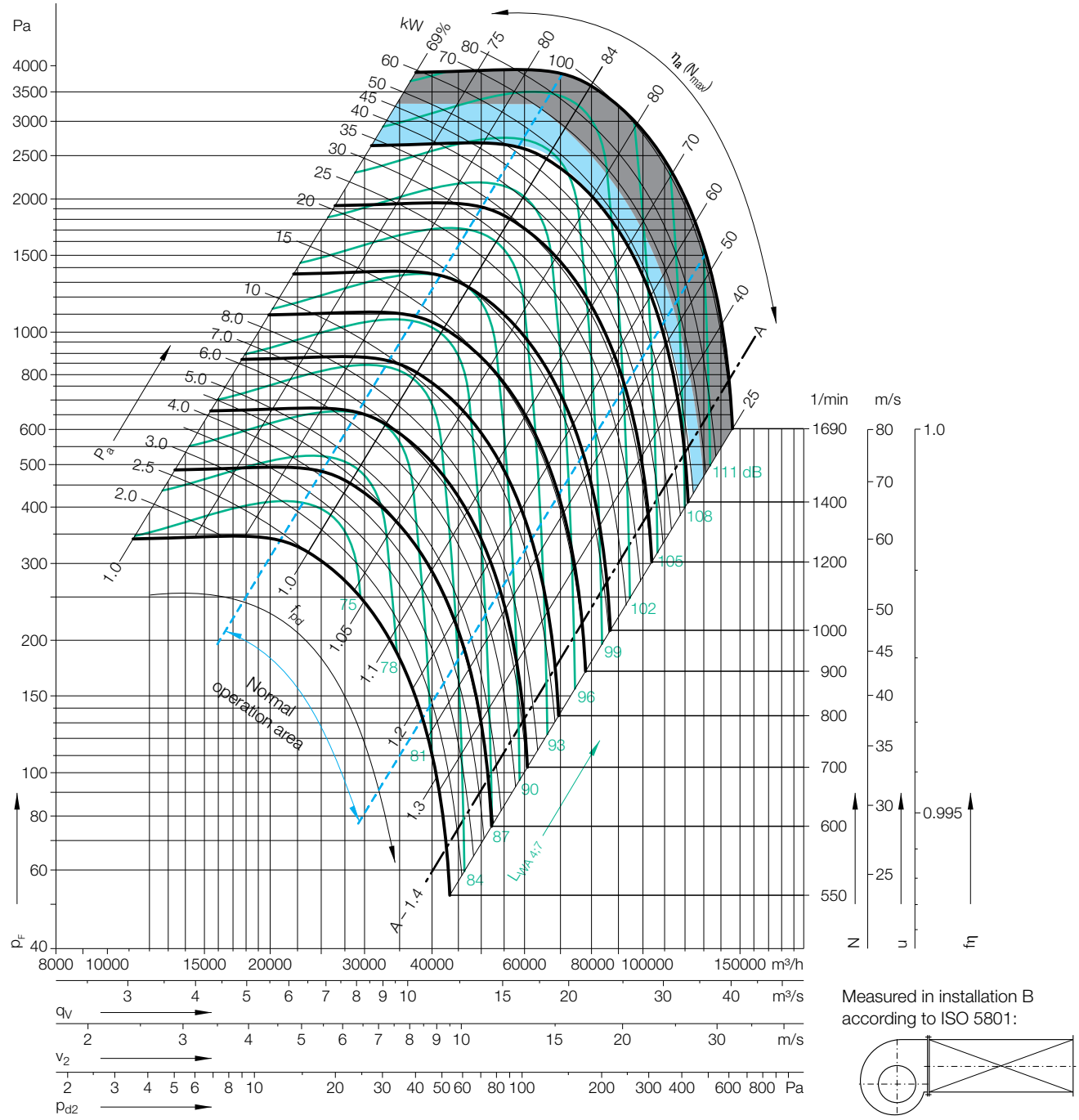


Measured in installation B according to ISO 5801:



## Determination of the Octave level

Relative sound power level for **inlet side** $L_{Wrel7}$ at octave band correction factors $f_c$.

| Speed | Duty point | 63 | 125 | 250 | 500 | 1000 | 2000 | 4000 | 8000 | Hz |
|---|---|---|---|---|---|---|---|---|---|---|
| ≤844 1/min | ≤0.8 $q_{Vopt}$ | 0 | 2 | 0 | -3 | -6 | -9 | -12 | -19 | dB |
| | >0.8-1.2 $q_{Vopt}$ | -2 | 1 | -2 | -3 | -6 | -8 | -14 | -20 | dB |
| | >1.2-1.6 $q_{Vopt}$ | -3 | 0 | -1 | -3 | -6 | -8 | -14 | -21 | dB |
| | >1.6 $\dot{V}_{opt}$ | -5 | -3 | -3 | -3 | -6 | -7 | -13 | -21 | dB |
| **Speed** | **Duty point** | **63** | **125** | **250** | **500** | **1000** | **2000** | **4000** | **8000** | **Hz** |
| >844 1/min | ≤0.8 $q_{Vopt}$ | -2 | -1 | -3 | -1 | -6 | -10 | -15 | -21 | dB |
| | >0.8-1.2 $q_{Vopt}$ | -7 | -4 | -5 | -1 | -6 | -9 | -14 | -21 | dB |
| | >1.2-1.6 $q_{Vopt}$ | -10 | -7 | -8 | -1 | -5 | -8 | -13 | -21 | dB |
| | >1.6 $q_{Vopt}$ | -10 | -8 | -8 | -2 | -6 | -8 | -11 | -18 | dB |

Relative sound power level for **discharge side** $L_{Wrel4}$ at octave band correction factors $f_c$.

| 63 | 125 | 250 | 500 | 1000 | 2000 | 4000 | 8000 | Hz |
|---|---|---|---|---|---|---|---|---|
| 13 | 7 | 4 | -3 | -8 | -14 | -17 | -25 | dB |
| 10 | 5 | 3 | -2 | -7 | -13 | -17 | -25 | dB |
| 7 | 2 | 2 | -2 | -6 | -12 | -18 | -27 | dB |
| 5 | 1 | 1 | -2 | -6 | -10 | -17 | -27 | dB |
| **63** | **125** | **250** | **500** | **1000** | **2000** | **4000** | **8000** | **Hz** |
| 11 | 4 | 2 | 0 | -7 | -12 | -17 | -24 | dB |
| 7 | 1 | -2 | -3 | -6 | -10 | -15 | -23 | dB |
| 3 | -2 | -4 | -3 | -5 | -9 | -14 | -23 | dB |
| 2 | -3 | -5 | -3 | -5 | -9 | -12 | -21 | dB |

# RZM 15-0900
# RZM 18-0900

## Technical Data

| RZM 15- | Nominal motor power kW | Poles | Motor size | Motor voltage V | Phases | Nominal frequency Hz | Connection | Nominal motor current A | Nominal motor speed 1/min | Max. fan speed 1/min | Max. operating frequency Hz | Weight kg |
|---|---|---|---|---|---|---|---|---|---|---|---|---|
| **0900-8D-31** | 11.0 | 8 | 180L | 400 | 3~ | 50 | △ | 25.0 | 725 | 790 | 54 | 706 |
| **0900-8D-33** | 15.0 | 8 | 200La | 400 | 3~ | 50 | △ | 32.5 | 725 | 870 | 60 | 847 |
| **0900-6W-34** | 22.0 | 6 | 200L | 400 | 3~ | 50 | △ | 42.5 | 978 | 985 | 50 | 847 |
| **0900-6W-37** | 30.0 | 6 | 225M | 400 | 3~ | 50 | △ | 57.0 | 980 | 1100 | 56 | 981 |
| **0900-6W-39** | 37.0 | 6 | 250M | 400 | 3~ | 50 | △ | 70.0 | 982 | 1180 | 60 | 1028 |
| **0900-6W-41** | 45.0 | 6 | 280S | 400 | 3~ | 50 | △ | 83.0 | 985 | 1260 | 63 | 1265 |
| **0900-6W-42** | 55.0 | 6 | 280M | 400 | 3~ | 50 | △ | 99.0 | 985 | 1350 | 68 | 1265 |
| **RZM 18-** | **kW** | | | **V** | | **Hz** | | **A** | **1/min** | **1/min** | **Hz** | **kg** |
| **0900-4W-41** | 75.0 | 4 | 280S | 400 | 3~ | 50 | △ | 132.0 | 1485 | 1485 | 50 | 1354 |

**Motor code:**
- W = Asynchronous motor (efficiency class IE2)
- D = Asynchronous motor

## Dimensions in mm, subject to change.

RZM 15-0900
RZM 18-0900

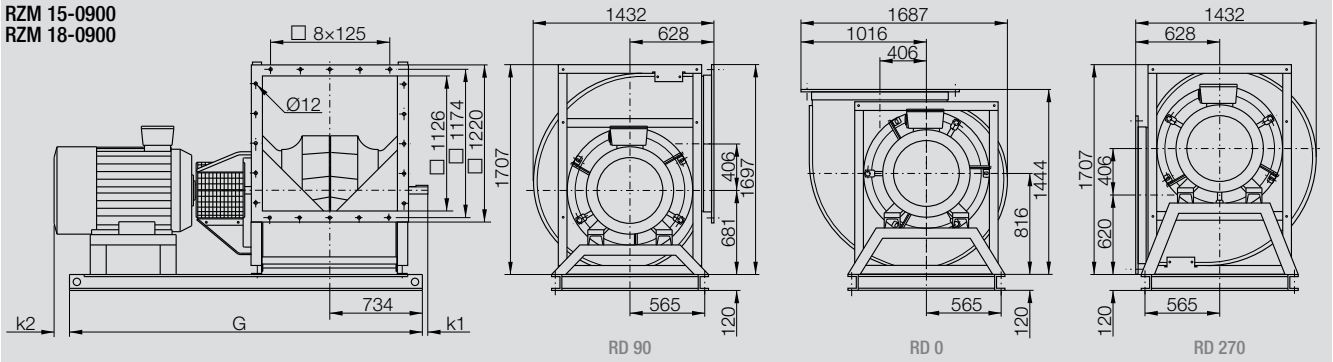


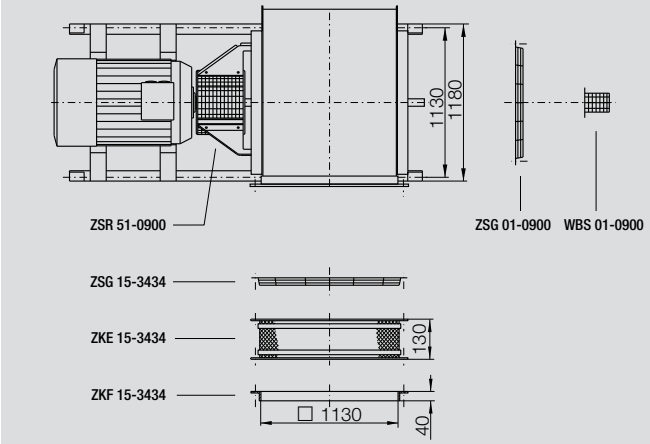


| Motor | G | k1 | k2 |
|---|---|---|---|
| **180** | 2246 | 35 | – |
| **200** | 2246 | 35 | 2 |
| **225** | 2292 | 35 | 25 |
| **250** | 2376 | 35 | 39 |
| **280** | 2508 | 95 | 40 |

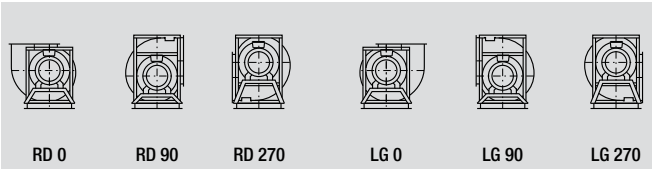


## Accessories

| RZM 15- | Frequency inverter 6SE6430- | Control Panel for frequency inverter 6SE6420- and 6SE6430- | Line Choke for 3~ | |
|---|---|---|---|---|
| **0900-8D-31** | 6SE6430-2AD31-5CA0 | 6SE6400-0BE00-0AA0 | 6SE6400-3CC03-5CD3 | |
| **0900-8D-33** | 6SE6430-2AD31-8DA0 | 6SE6400-0BE00-0AA0 | 6SE6400-3CC04-4DD0 | |
| **0900-6W-34** | 6SE6430-2AD33-0DA0 | 6SE6400-0BE00-0AA0 | 6SE6400-3CC05-2DD0 | |
| **0900-6W-37** | 6SE6430-2AD33-7EA0 | 6SE6400-0BE00-0AA0 | 6SE6400-3CC08-3ED0 | |
| **0900-6W-39** | 6SE6430-2AD33-7EA0 | 6SE6400-0BE00-0AA0 | 6SE6400-3CC08-3ED0 | |
| **0900-6W-41** | 6SE6430-2AD34-5EA0 | 6SE6400-0BE00-0AA0 | 6SE6400-3CC08-3ED0 | |
| **0900-6W-42** | 6SE6430-2AD35-5FA0 | 6SE6400-0BE00-0AA0 | 6SE6400-3CC11-2FD0 | |
| **RZM 18-** | | | | |
| **0900-4W-41** | 6SE6430-2AD37-5FA0 | 6SE6400-0BE00-0AA0 | 6SE6400-3CC11-2FD0 | |

# RZM 15-1000
# RZM 18-1000

## Technical Data

**Please note coloured area!**

- all types suitable
- RZM 18 only
- do not use in this area

**Impeller Data**

| | | | |
|---|---|---|---|
| Impeller diameter | $D_r$ | 1000 | mm |
| Number of blades | z | 12 | |
| Moment of Inertia | J | 22 | kgm² |

**Impeller Data**

| | | | |
|---|---|---|---|
| Impeller weight | m | 133 | kg |
| Density of media | $\rho_1$ | 1.2 | kg/m³ |

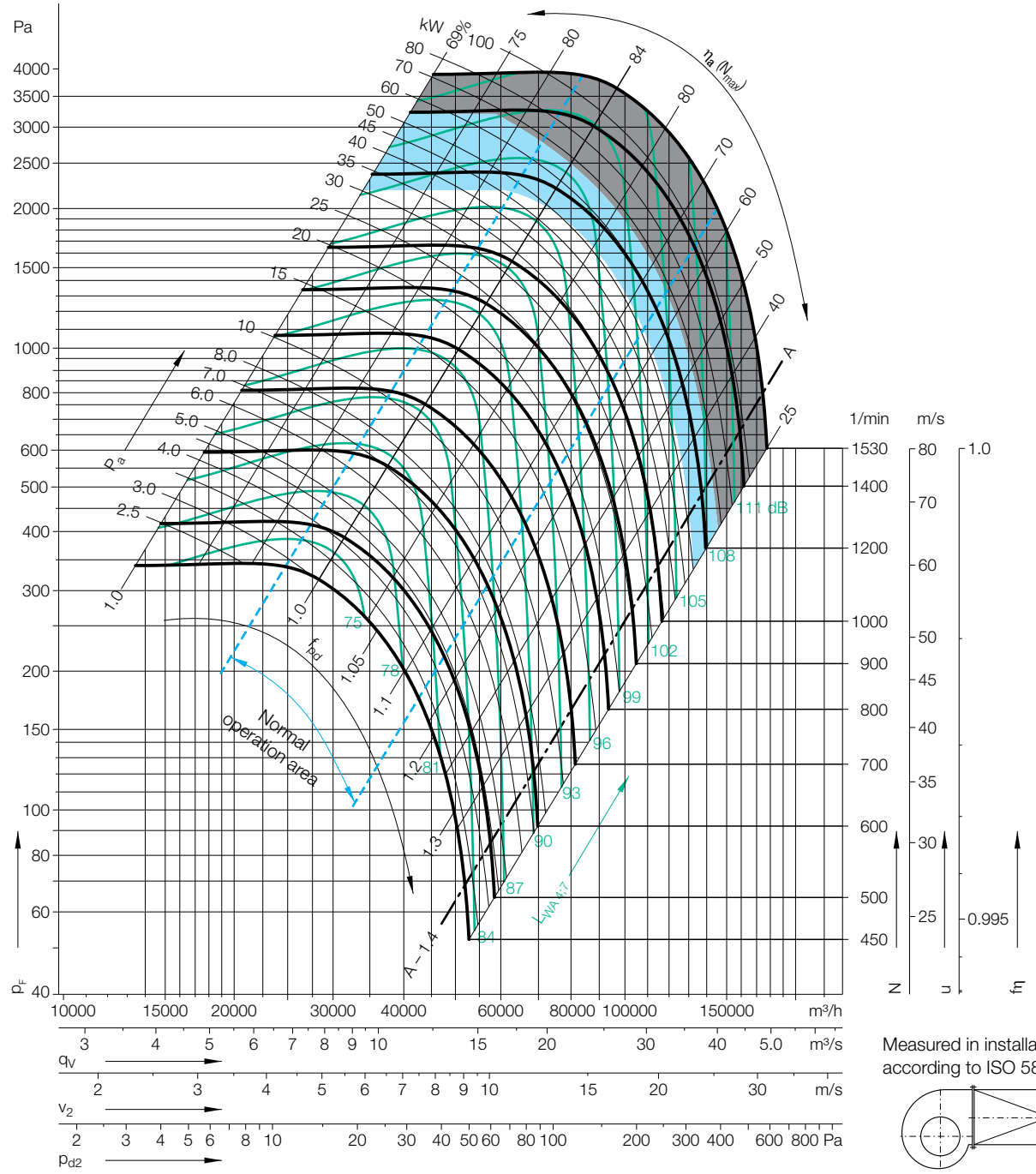


Measured in installation B according to ISO 5801:

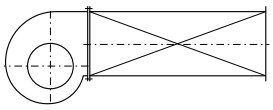

## Determination of the Octave level

Relative sound power level for **inlet side** $L_{Wrel7}$ at octave band correction factors $f_c$.

| Speed | Duty point | 63 | 125 | 250 | 500 | 1000 | 2000 | 4000 | 8000 | Hz |
|---|---|---|---|---|---|---|---|---|---|---|
| ≤764 1/min | ≤0.8 $q_{Vopt}$ | 0 | 2 | 0 | -3 | -6 | -9 | -12 | -19 | dB |
| | >0.8-1.2 $q_{Vopt}$ | -2 | 1 | -2 | -3 | -6 | -8 | -14 | -20 | dB |
| | >1.2-1.6 $q_{Vopt}$ | -3 | 0 | -1 | -3 | -6 | -8 | -14 | -21 | dB |
| | >1.6 $q_{Vopt}$ | -5 | -3 | -3 | -3 | -6 | -7 | -13 | -21 | dB |
| **Speed** | **Duty point** | **63** | **125** | **250** | **500** | **1000** | **2000** | **4000** | **8000** | **Hz** |
| >764 1/min | ≤0.8 $q_{Vopt}$ | -2 | -1 | -3 | -1 | -6 | -10 | -15 | -21 | dB |
| | >0.8-1.2 $q_{Vopt}$ | -7 | -4 | -5 | -1 | -6 | -9 | -14 | -21 | dB |
| | >1.2-1.6 $q_{Vopt}$ | -10 | -7 | -8 | -1 | -5 | -8 | -13 | -21 | dB |
| | >1.6 $q_{Vopt}$ | -10 | -8 | -8 | -2 | -6 | -8 | -11 | -18 | dB |

Relative sound power level for **discharge side** $L_{Wrel4}$ at octave band correction factors $f_c$.

| 63 | 125 | 250 | 500 | 1000 | 2000 | 4000 | 8000 | Hz |
|---|---|---|---|---|---|---|---|---|
| 13 | 7 | 4 | -3 | -8 | -14 | -17 | -25 | dB |
| 10 | 5 | 3 | -2 | -7 | -13 | -17 | -25 | dB |
| 7 | 2 | 2 | -2 | -6 | -12 | -18 | -27 | dB |
| 5 | 1 | 1 | -2 | -6 | -10 | -17 | -27 | dB |
| **63** | **125** | **250** | **500** | **1000** | **2000** | **4000** | **8000** | **Hz** |
| 11 | 4 | 2 | 0 | -7 | -12 | -17 | -24 | dB |
| 7 | 1 | -2 | -3 | -6 | -10 | -15 | -23 | dB |
| 3 | -2 | -4 | -3 | -5 | -9 | -14 | -23 | dB |
| 2 | -3 | -5 | -3 | -5 | -9 | -12 | -21 | dB |

# RZM 15-1000
# RZM 18-1000

## Technical Data

| RZM 15- | Nominal motor power kW | Poles | Motor size | Motor voltage V | Phases | Nominal frequency Hz | Connection | Nominal motor current A | Nominal motor speed 1/min | Max. fan speed 1/min | Max. operating frequency Hz | Weight kg |
|---|---|---|---|---|---|---|---|---|---|---|---|---|
| **1000-8D-33** | 15.0 | 8 | 200La | 400 | 3~ | 50 | △ | 32.5 | 725 | 735 | 50 | 925 |
| **1000-8D-36** | 18.5 | 8 | 225S | 400 | 3~ | 50 | △ | 38.5 | 730 | 790 | 54 | 995 |
| **1000-8D-37** | 22.0 | 8 | 225M | 400 | 3~ | 50 | △ | 45.0 | 730 | 840 | 57 | 995 |
| **1000-8D-39** | 30.0 | 8 | 250Ma | 400 | 3~ | 50 | △ | 58.0 | 730 | 930 | 63 | 1165 |
| **1000-6W-39** | 37.0 | 6 | 250M | 400 | 3~ | 50 | △ | 70.0 | 982 | 995 | 50 | 1165 |
| **1000-6W-41** | 45.0 | 6 | 280S | 400 | 3~ | 50 | △ | 83.0 | 985 | 1060 | 53 | 1386 |
| **1000-6W-42** | 55.0 | 6 | 280M | 400 | 3~ | 50 | △ | 99.0 | 985 | 1140 | 57 | 1386 |
| **RZM 18-** | **kW** | | | **V** | | **Hz** | | **A** | **1/min** | **1/min** | **Hz** | **kg** |
| **1000-6W-44** | 75.0 | 6 | 315S | 400 | 3~ | 50 | △ | 138.0 | 988 | 1265 | 64 | 1640 |

**Motor code:**
- W = Asynchronous motor (efficiency class IE2)
- D = Asynchronous motor

## Dimensions in mm, subject to change.

RZM 15-1000
RZM 18-1000

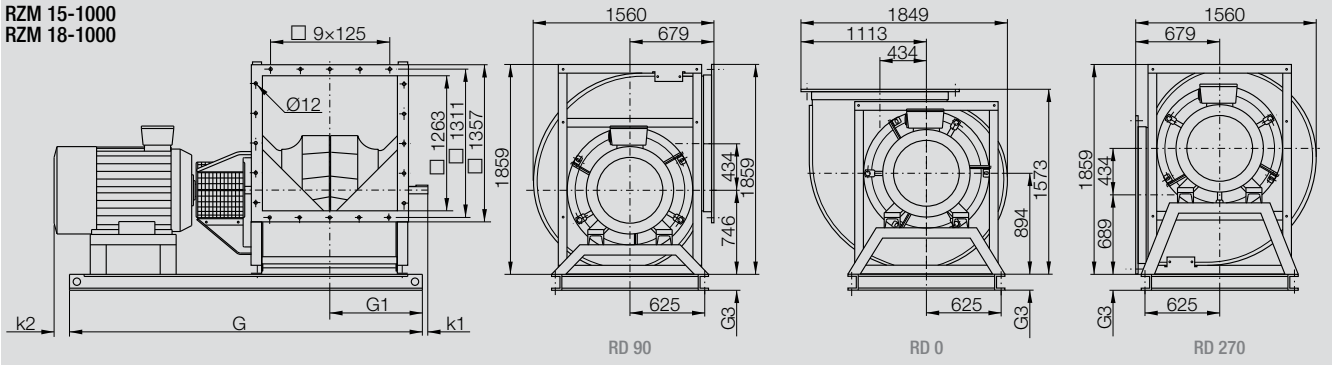


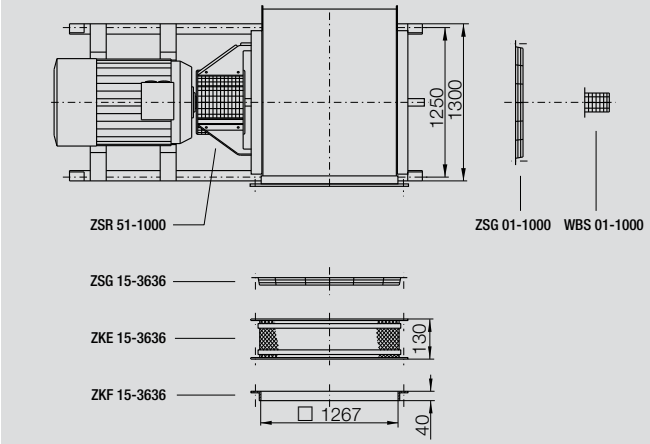


| Motor | G | G1 | G3 | k1 | k2 |
|---|---|---|---|---|---|
| **200** | 2385 | 803 | 120 | 34 | 2 |
| **225** | 2431 | 803 | 120 | 34 | 25 |
| **250** | 2515 | 803 | 120 | 34 | 39 |
| **280** | 2647 | 833 | 140 | 4 | 10 |
| **315** | 2862 | 833 | 140 | 64 | – |

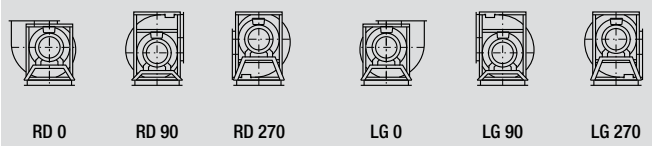


## Accessories

| RZM 15- | Frequency inverter 6SE6430- | Control Panel for frequency inverter 6SE6420- and 6SE6430- | Line Choke for 3~ | |
|---|---|---|---|---|
| **1000-8D-33** | 6SE6430-2AD31-8DA0 | 6SE6400-0BE00-0AA0 | 6SE6400-3CC04-4DD0 | |
| **1000-8D-36** | 6SE6430-2AD32-2DA0 | 6SE6400-0BE00-0AA0 | 6SE6400-3CC04-4DD0 | |
| **1000-8D-37** | 6SE6430-2AD33-0DA0 | 6SE6400-0BE00-0AA0 | 6SE6400-3CC05-2DD0 | |
| **1000-8D-39** | 6SE6430-2AD33-0DA0 | 6SE6400-0BE00-0AA0 | 6SE6400-3CC05-2DD0 | |
| **1000-6W-39** | 6SE6430-2AD33-7EA0 | 6SE6400-0BE00-0AA0 | 6SE6400-3CC08-3ED0 | |
| **1000-6W-41** | 6SE6430-2AD34-5EA0 | 6SE6400-0BE00-0AA0 | 6SE6400-3CC08-3ED0 | |
| **1000-6W-42** | 6SE6430-2AD35-5FA0 | 6SE6400-0BE00-0AA0 | 6SE6400-3CC11-2FD0 | |
| **RZM 18-** | | | | |
| **1000-6W-44** | 6SE6430-2AD38-8FA0 | 6SE6400-0BE00-0AA0 | 6SE6400-3CC11-7FD0 | |

# RZM 13-1120

## Technical Data

**Please note coloured area!**

- ☐ all types suitable
- ■ do not use in this area

**Impeller Data**

| | | | |
|---|---|---|---|
| Impeller diameter | $D_r$ | 1120 | mm |
| Number of blades | z | 12 | |
| Moment of Inertia | J | 32 | kgm² |

**Impeller Data**

| | | | |
|---|---|---|---|
| Impeller weight | m | 200 | kg |
| Density of media | $\rho_1$ | 1.2 | kg/m³ |

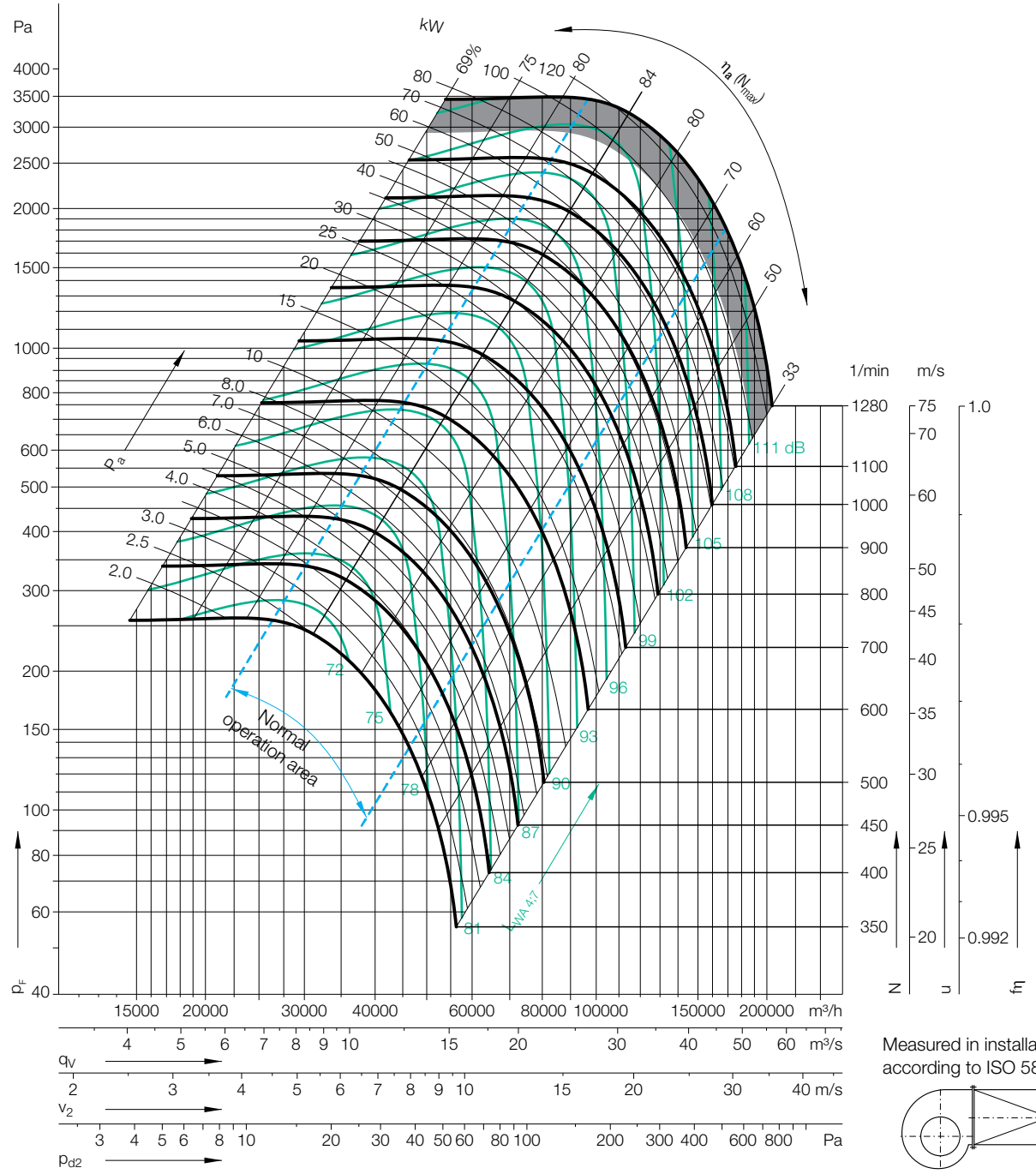


Measured in installation B according to ISO 5801:

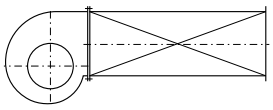

## Determination of the Octave level

Relative sound power level for **inlet side** $L_{Wrel7}$ at octave band correction factors $f_c$.

| Speed | Duty point | 63 | 125 | 250 | 500 | 1000 | 2000 | 4000 | 8000 | Hz |
|---|---|---|---|---|---|---|---|---|---|---|
| ≤682 1/min | ≤0.8 $q_{Vopt}$ | 0 | 3 | 1 | -2 | -6 | -9 | -13 | -20 | dB |
| | >0.8-1.2 $q_{Vopt}$ | -1 | 2 | 1 | -2 | -6 | -9 | -14 | -21 | dB |
| | >1.2-1.6 $q_{Vopt}$ | -2 | 1 | 1 | -3 | -5 | -8 | -15 | -21 | dB |
| | >1.6 $q_{Vopt}$ | -5 | -3 | -2 | -3 | -5 | -7 | -14 | -21 | dB |
| **Speed** | **Duty point** | **63** | **125** | **250** | **500** | **1000** | **2000** | **4000** | **8000** | **Hz** |
| >682 1/min | ≤0.8 $q_{Vopt}$ | -1 | -1 | -3 | -2 | -7 | -11 | -16 | -21 | dB |
| | >0.8-1.2 $q_{Vopt}$ | -6 | -4 | -6 | -2 | -7 | -10 | -15 | -21 | dB |
| | >1.2-1.6 $q_{Vopt}$ | -10 | -7 | -8 | -3 | -6 | -9 | -14 | -21 | dB |
| | >1.6 $q_{Vopt}$ | -10 | -7 | -8 | -3 | -6 | -8 | -11 | -20 | dB |

Relative sound power level for **discharge side** $L_{Wrel4}$ at octave band correction factors $f_c$.

| 63 | 125 | 250 | 500 | 1000 | 2000 | 4000 | 8000 | Hz |
|---|---|---|---|---|---|---|---|---|
| 12 | 7 | 4 | -3 | -8 | -14 | -18 | -26 | dB |
| 10 | 5 | 3 | -3 | -8 | -14 | -19 | -28 | dB |
| 7 | 2 | 3 | -3 | -6 | -13 | -20 | -28 | dB |
| 4 | 1 | 2 | -3 | -6 | -12 | -19 | -28 | dB |
| **63** | **125** | **250** | **500** | **1000** | **2000** | **4000** | **8000** | **Hz** |
| 10 | 4 | 1 | -1 | -7 | -13 | -18 | -25 | dB |
| 6 | 2 | -2 | -3 | -6 | -12 | -15 | -25 | dB |
| 2 | -3 | -3 | -3 | -6 | -11 | -15 | -25 | dB |
| 1 | -3 | -5 | -3 | -6 | -11 | -13 | -22 | dB |

# RZM 13-1120

## Technical Data

| RZM 13- | Nominal motor power kW | Poles | Motor size | Motor voltage V | Phases | Nominal frequency Hz | Connection | Nominal motor current A | Nominal motor speed 1/min | Max. fan speed 1/min | Max. operating frequency Hz | Weight kg |
|---|---|---|---|---|---|---|---|---|---|---|---|---|
| **1120-8D-39** | 30 | 8 | 250M | 400 | 3~ | 50 | △ | 58 | 730 | 770 | 52 | 1490 |
| **1120-8D-41** | 37 | 8 | 280S | 400 | 3~ | 50 | △ | 72 | 735 | 830 | 56 | 1605 |
| **1120-8D-42** | 45 | 8 | 280M | 400 | 3~ | 50 | △ | 87 | 735 | 890 | 60 | 1665 |
| **1120-8D-44** | 55 | 8 | 315S | 400 | 3~ | 50 | △ | 106 | 740 | 950 | 64 | 1805 |
| **1120-6W-44** | 75 | 6 | 315S | 400 | 3~ | 50 | △ | 138 | 988 | 1050 | 53 | 1835 |
| **1120-6W-46** | 90 | 6 | 315M | 400 | 3~ | 50 | △ | 165 | 988 | 1115 | 56 | 1895 |

**Motor code:**
- W = Asynchronous motor (efficiency class IE2)
- D = Asynchronous motor

## Dimensions in mm, subject to change.

RZM 13-1120

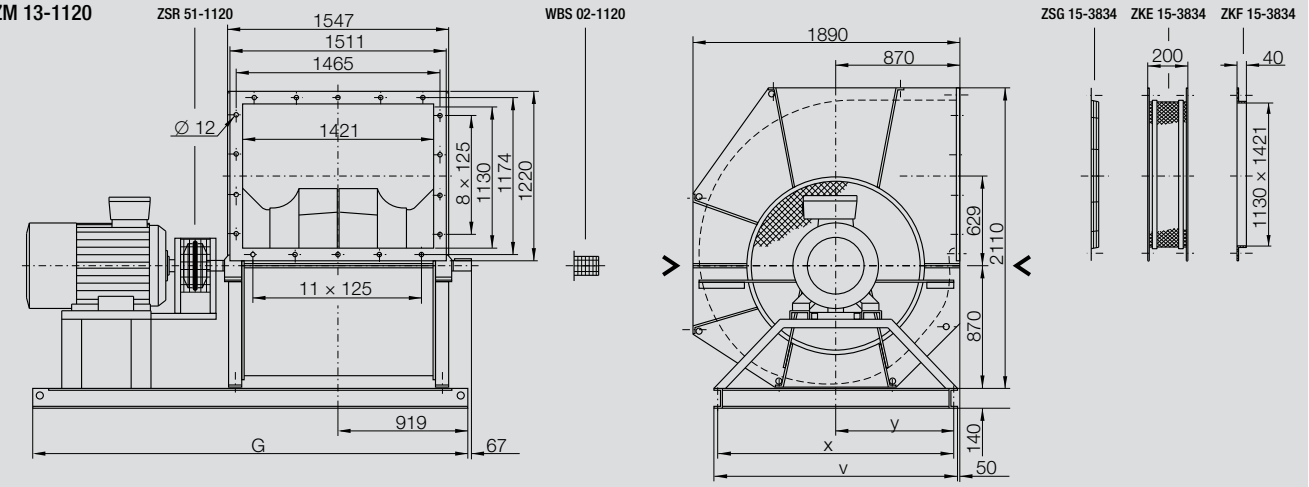


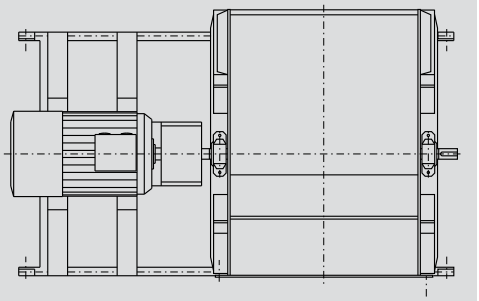

| Motor | G | v | x | y |
|---|---|---|---|---|
| **250** | 2834 | 1640 | 1590 | 795 |
| **280** | 2896 | 1640 | 1590 | 795 |
| **315** | 3072 | 1720 | 1670 | 835 |

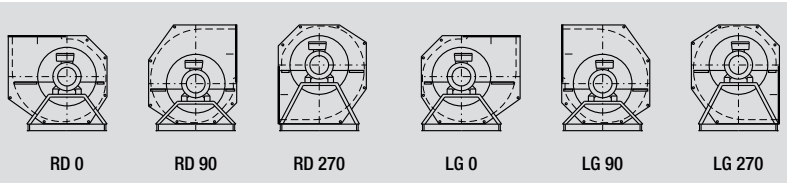


## Accessories

| RZM 13- | Frequency inverter 6SE6430- | Control Panel for frequency inverter 6SE6420- and 6SE6430- | Line Choke for 3~ | |
|---|---|---|---|---|
| **1120-8D-39** | 6SE6430-2AD33-0DA0 | 6SE6400-0BE00-0AA0 | 6SE6400-3CC05-2DD0 | |
| **1120-8D-41** | 6SE6430-2AD34-5EA0 | 6SE6400-0BE00-0AA0 | 6SE6400-3CC08-3ED0 | |
| **1120-8D-42** | 6SE6430-2AD35-5FA0 | 6SE6400-0BE00-0AA0 | 6SE6400-3CC11-2FD0 | |
| **1120-8D-44** | 6SE6430-2AD37-5FA0 | 6SE6400-0BE00-0AA0 | 6SE6400-3CC11-2FD0 | |
| **1120-6W-44** | 6SE6430-2AD38-8FA0 | 6SE6400-0BE00-0AA0 | 6SE6400-3CC11-7FD0 | |
| **1120-6W-46** | 6SE6430-2AD38-8FA0 | 6SE6400-0BE00-0AA0 | 6SE6400-3CC11-7FD0 | |

# RZM 13-1250

## Technical Data

**Please note coloured area!**

- ☐ all types suitable
- ■ do not use in this area

**Impeller Data**

| | | | |
|---|---|---|---|
| Impeller diameter | $D_r$ | 125 | mm |
| Number of blades | z | 12 | |
| Moment of Inertia | J | 62.5 | kgm² |

**Impeller Data**

| | | | |
|---|---|---|---|
| Impeller weight | m | 263 | kg |
| Density of media | $\rho_1$ | 1.2 | kg/m³ |

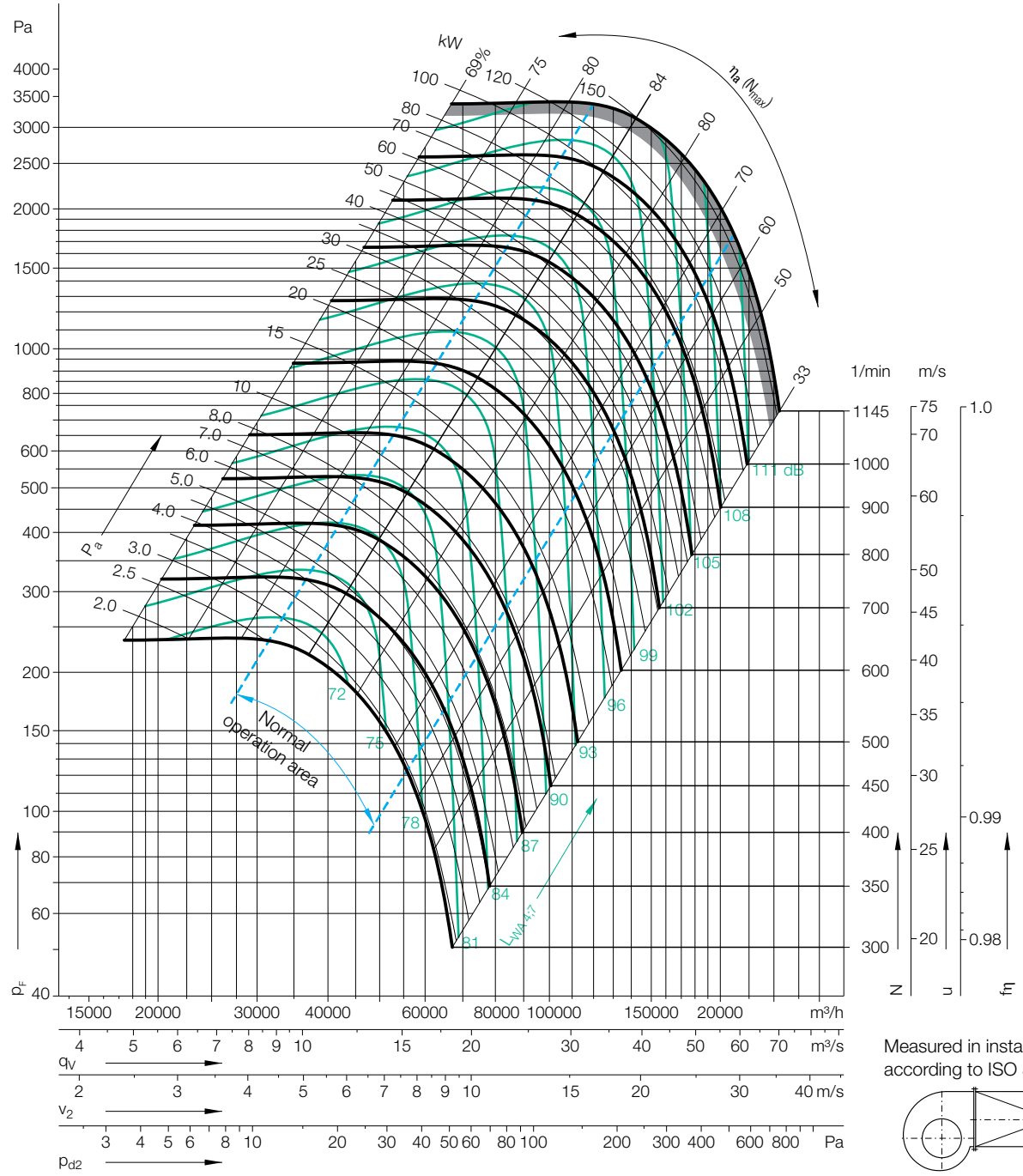


Measured in installation B according to ISO 5801:

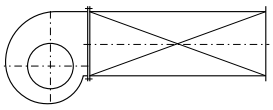

## Determination of the Octave level

Relative sound power level for **inlet side** $L_{Wrel7}$ at octave band correction factors $f_c$.

| Speed | Duty point | 63 | 125 | 250 | 500 | 1000 | 2000 | 4000 | 8000 | Hz |
|---|---|---|---|---|---|---|---|---|---|---|
| ≤611 1/min | ≤0.8 $q_{Vopt}$ | 0 | 3 | 1 | -2 | -6 | -9 | -13 | -20 | dB |
| | >0.8-1.2 $q_{Vopt}$ | -1 | 2 | 1 | -2 | -6 | -9 | -14 | -21 | dB |
| | >1.2-1.6 $q_{Vopt}$ | -2 | 1 | 1 | -3 | -5 | -8 | -15 | -21 | dB |
| | >1.6 $q_{Vopt}$ | -5 | -3 | -2 | -3 | -5 | -7 | -14 | -21 | dB |
| **Speed** | **Duty point** | **63** | **125** | **250** | **500** | **1000** | **2000** | **4000** | **8000** | **Hz** |
| >611 1/min | ≤0.8 $q_{Vopt}$ | -1 | -1 | -3 | -2 | -7 | -11 | -16 | -21 | dB |
| | >0.8-1.2 $q_{Vopt}$ | -6 | -4 | -6 | -2 | -7 | -10 | -15 | -21 | dB |
| | >1.2-1.6 $q_{Vopt}$ | -10 | -7 | -8 | -3 | -6 | -9 | -14 | -21 | dB |
| | >1.6 $q_{Vopt}$ | -10 | -7 | -8 | -3 | -6 | -8 | -11 | -20 | dB |

Relative sound power level for **discharge side** $L_{Wrel4}$ at octave band correction factors $f_c$.

| 63 | 125 | 250 | 500 | 1000 | 2000 | 4000 | 8000 | Hz |
|---|---|---|---|---|---|---|---|---|
| 12 | 7 | 4 | -3 | -8 | -14 | -18 | -26 | dB |
| 10 | 5 | 3 | -3 | -8 | -14 | -19 | -28 | dB |
| 7 | 2 | 3 | -3 | -6 | -13 | -20 | -28 | dB |
| 4 | 1 | 2 | -3 | -6 | -12 | -19 | -28 | dB |
| **63** | **125** | **250** | **500** | **1000** | **2000** | **4000** | **8000** | **Hz** |
| 10 | 4 | 1 | -1 | -7 | -13 | -18 | -25 | dB |
| 6 | 2 | -2 | -3 | -6 | -12 | -15 | -25 | dB |
| 2 | -3 | -3 | -3 | -6 | -11 | -15 | -25 | dB |
| 1 | -3 | -5 | -3 | -6 | -11 | -13 | -22 | dB |

# RZM 13-1250

## Technical Data

| RZM 13- | Nominal motor power kW | Poles | Motor size | Motor voltage V | Phases | Nominal frequency Hz | Connection | Nominal motor current A | Nominal motor speed 1/min | Max. fan speed 1/min | Max. operating frequency Hz | Weight kg |
|---|---|---|---|---|---|---|---|---|---|---|---|---|
| **1250-8D-42** | 45 | 8 | 280M | 400 | 3~ | 50 | △ | 87 | 735 | 740 | 50 | 2115 |
| **1250-8D-44** | 55 | 8 | 315S | 400 | 3~ | 50 | △ | 106 | 740 | 790 | 53 | 2255 |
| **1250-8D-46** | 75 | 8 | 315M | 400 | 3~ | 50 | △ | 140 | 738 | 880 | 59 | 2370 |
| **1250-8D-50** | 90 | 8 | 315L | 400 | 3~ | 50 | △ | 168 | 738 | 935 | 63 | 2510 |
| **1250-6W-50** | 110 | 6 | 315L | 400 | 3~ | 50 | △ | 196 | 988 | 990 | 50 | 2490 |
| **1250-6W-51** | 132 | 6 | 315L | 400 | 3~ | 50 | △ | 235 | 988 | 1055 | 53 | 2580 |

**Motor code:**
- W = Asynchronous motor (efficiency class IE2)
- D = Asynchronous motor

## Dimensions in mm, subject to change.

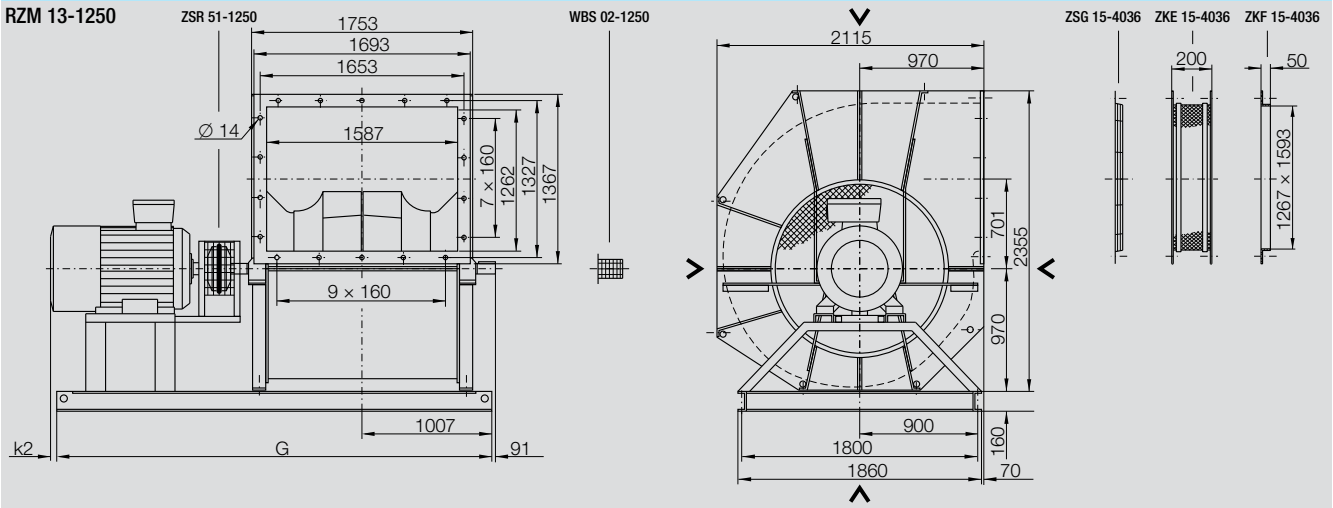


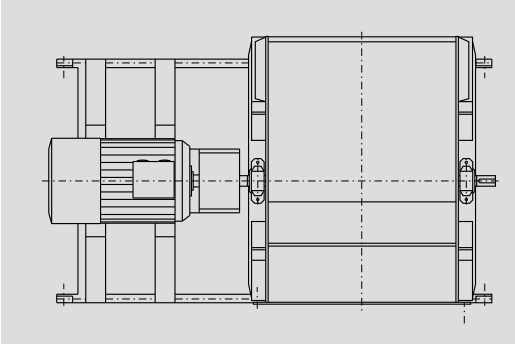

| Motor | G | k2 |
|---|---|---|
| **280** | 3096 | – |
| **315** | 3272 | 127 |

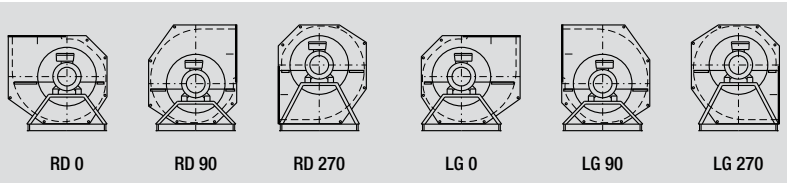


## Accessories

| RZM 13- | Frequency inverter 6SE6430- | Control Panel for frequency inverter 6SE6420- and 6SE6430- | Line Choke for 3~ | Interference Suppression Filter - Class A |
|---|---|---|---|---|
| **1250-8D-42** | 6SE6430-2AD35-5FA0 | 6SE6400-0BE00-0AA0 | 6SE6400-3CC11-2FD0 | - |
| **1250-8D-44** | 6SE6430-2AD37-5FA0 | 6SE6400-0BE00-0AA0 | 6SE6400-3CC11-2FD0 | - |
| **1250-8D-46** | 6SE6430-2AD38-8FA0 | 6SE6400-0BE00-0AA0 | 6SE6400-3CC11-7FD0 | - |
| **1250-8D-50** | 6SE6430-2AD38-8FA0 | 6SE6400-0BE00-0AA0 | 6SE6400-3CC11-7FD0 | - |
| **1250-6W-50** | 6SE6430-2UD41-3FA0 | 6SE6400-0BE00-0AA0 | 6SL3000-0CE32-8AA0 | 6SL3000-0BE34-4AA0 |
| **1250-6W-51** | 6SE6430-2UD41-3FA0 | 6SE6400-0BE00-0AA0 | 6SL3000-0CE32-8AA0 | 6SL3000-0BE34-4AA0 |

# RZM 13-1400

## Technical Data

**Please note coloured area!**

- ☐ all types suitable
- ■ do not use in this area

**Impeller Data**

| | | | |
|---|---|---|---|
| Impeller diameter | $D_r$ | 1400 | mm |
| Number of blades | z | 12 | |
| Moment of Inertia | J | 120 | kgm² |

**Impeller Data**

| | | | |
|---|---|---|---|
| Impeller weight | m | 335 | kg |
| Density of media | $\rho_1$ | 1.2 | kg/m³ |

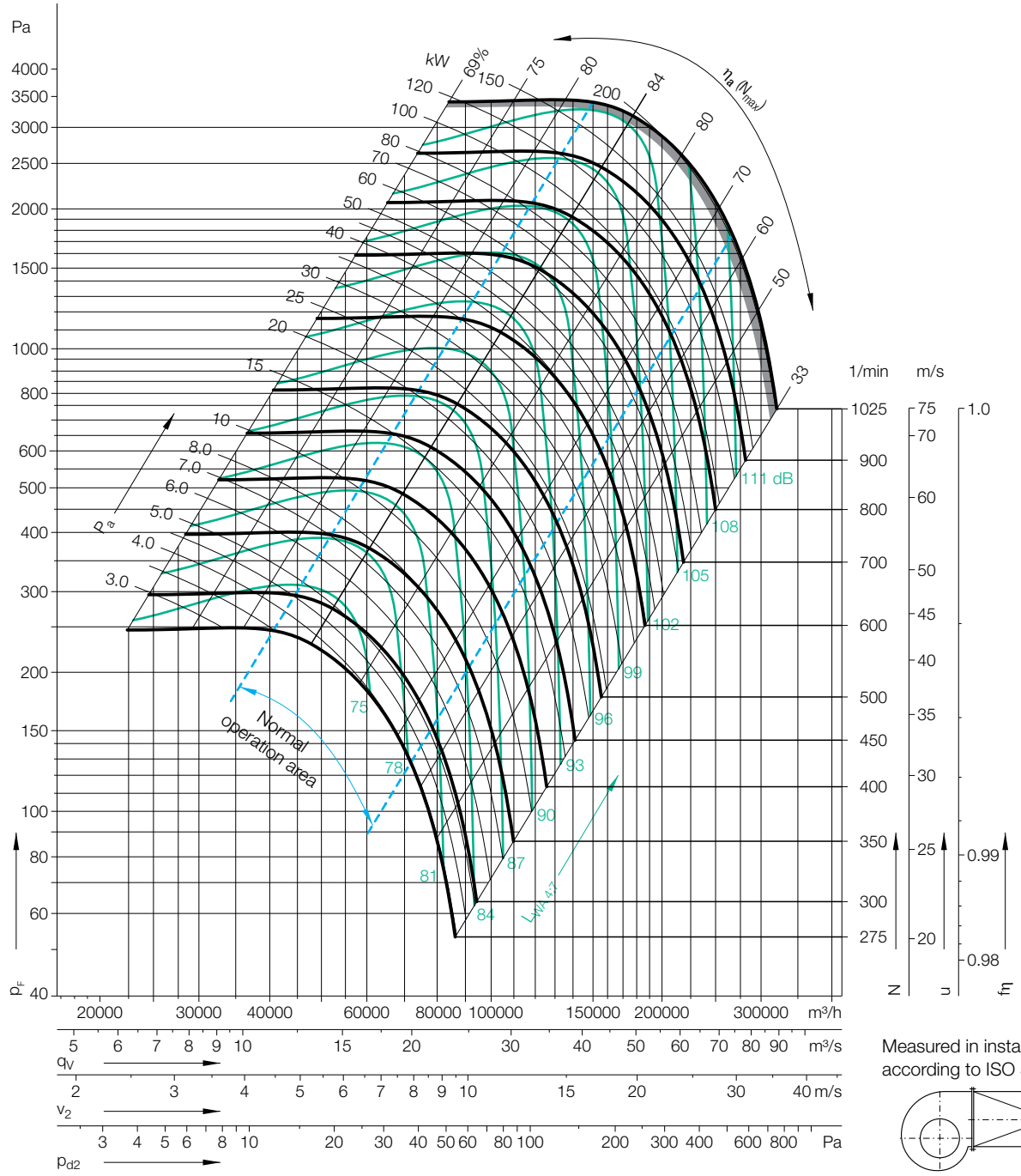


Measured in installation B according to ISO 5801:

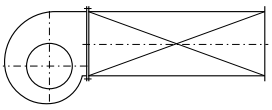

## Determination of the Octave level

Relative sound power level for **inlet side** $L_{Wrel7}$ at octave band correction factors $f_c$.

| Speed | Duty point | 63 | 125 | 250 | 500 | 1000 | 2000 | 4000 | 8000 | Hz |
|---|---|---|---|---|---|---|---|---|---|---|
| ≤546 1/min | ≤0.8 $q_{Vopt}$ | 0 | 3 | 1 | -2 | -6 | -9 | -13 | -20 | dB |
| | >0.8-1.2 $q_{Vopt}$ | -1 | 2 | 1 | -2 | -6 | -9 | -14 | -21 | dB |
| | >1.2-1.6 $q_{Vopt}$ | -2 | 1 | 1 | -3 | -5 | -8 | -15 | -21 | dB |
| | >1.6 $q_{Vopt}$ | -5 | -3 | -2 | -3 | -5 | -7 | -14 | -21 | dB |
| **Speed** | **Duty point** | **63** | **125** | **250** | **500** | **1000** | **2000** | **4000** | **8000** | **Hz** |
| >546 1/min | ≤0.8 $q_{Vopt}$ | -1 | -1 | -3 | -2 | -7 | -11 | -16 | -21 | dB |
| | >0.8-1.2 $q_{Vopt}$ | -6 | -4 | -6 | -2 | -7 | -10 | -15 | -21 | dB |
| | >1.2-1.6 $q_{Vopt}$ | -10 | -7 | -8 | -3 | -6 | -9 | -14 | -21 | dB |
| | >1.6 $q_{Vopt}$ | -10 | -7 | -8 | -3 | -6 | -8 | -11 | -20 | dB |

Relative sound power level for **discharge side** $L_{Wrel4}$ at octave band correction factors $f_c$.

| 63 | 125 | 250 | 500 | 1000 | 2000 | 4000 | 8000 | Hz |
|---|---|---|---|---|---|---|---|---|
| 12 | 7 | 4 | -3 | -8 | -14 | -18 | -26 | dB |
| 10 | 5 | 3 | -3 | -8 | -14 | -19 | -28 | dB |
| 7 | 2 | 3 | -3 | -6 | -13 | -20 | -28 | dB |
| 4 | 1 | 2 | -3 | -6 | -12 | -19 | -28 | dB |
| **63** | **125** | **250** | **500** | **1000** | **2000** | **4000** | **8000** | **Hz** |
| 10 | 4 | 1 | -1 | -7 | -13 | -18 | -25 | dB |
| 6 | 2 | -2 | -3 | -6 | -12 | -15 | -25 | dB |
| 2 | -3 | -3 | -3 | -6 | -11 | -15 | -25 | dB |
| 1 | -3 | -5 | -3 | -6 | -11 | -13 | -22 | dB |

# RZM 13-1400

## Technical Data

| RZM 13- | Nominal motor power kW | Poles | Motor size | Motor voltage V | Phases | Nominal frequency Hz | Connection | Nominal motor current A | Nominal motor speed 1/min | Max. fan speed 1/min | Max. operating frequency Hz | Weight kg |
|---|---|---|---|---|---|---|---|---|---|---|---|---|
| **1400-8D-50** | 90 | 8 | 315L | 400 | 3~ | 50 | △ | 168 | 738 | 770 | 52 | 2915 |
| **1400-8D-51** | 110 | 8 | 315L | 400 | 3~ | 50 | △ | 205 | 738 | 820 | 55 | 3025 |
| **1400-8D-52** | 132 | 8 | 315L | 400 | 3~ | 50 | △ | 245 | 738 | 875 | 59 | 3135 |
| **1400-8D-53** | 160 | 8 | 315 | 400 | 3~ | 50 | △ | 295 | 739 | 925 | 62 | 3235 |

**Motor code:**
- W = Asynchronous motor (efficiency class IE2)
- D = Asynchronous motor

## Dimensions in mm, subject to change.

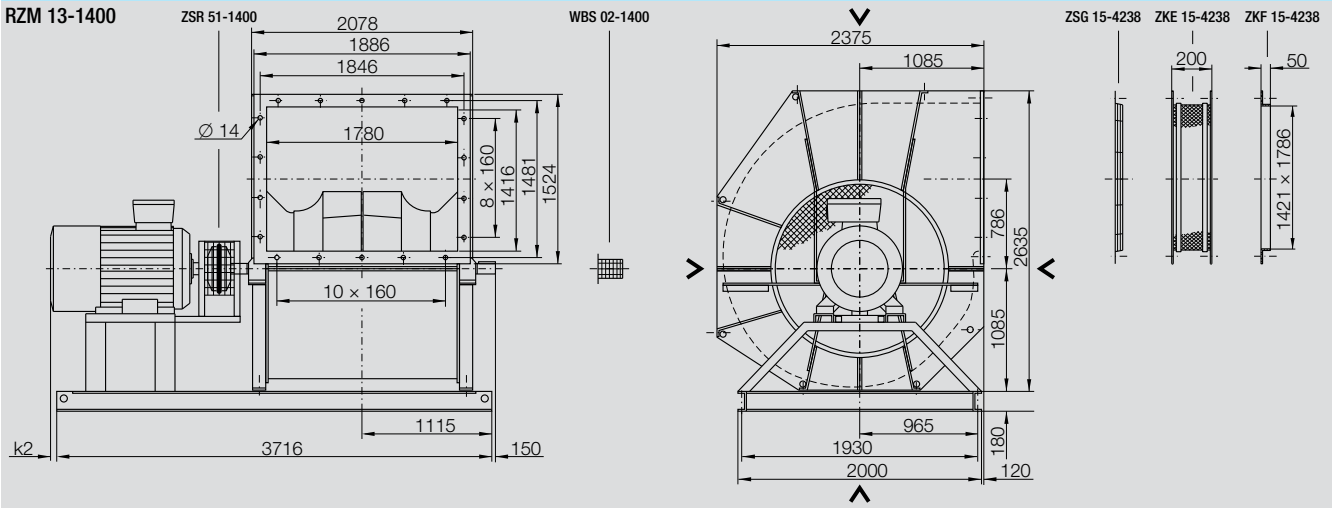


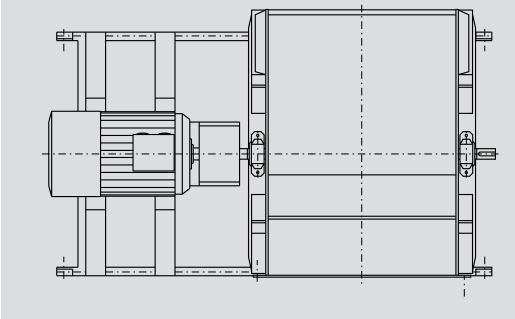

| Motor | k2 |
|---|---|
| 315 S/M/L | – |
| 315-6/8PB80 | 101 |

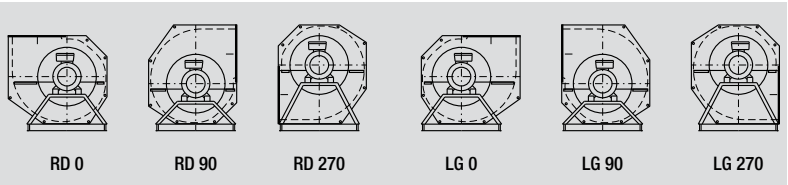


## Accessories

| RZM 13- | Frequency inverter 6SE6430- | Control Panel for frequency inverter 6SE6420- and 6SE6430- | Line Choke for 3~ | Interference Suppression Filter - Class A |
|---|---|---|---|---|
| **1400-8D-50** | 6SE6430-2AD38-8FA0 | 6SE6400-0BE00-0AA0 | 6SE6400-3CC11-7FD0 | - |
| **1400-8D-51** | 6SE6430-2UD41-3FA0 | 6SE6400-0BE00-0AA0 | 6SL3000-0CE32-8AA0 | 6SL3000-0BE34-4AA0 |
| **1400-8D-52** | 6SE6430-2UD41-6GA0 | 6SE6400-0BE00-0AA0 | 6SL3000-0CE33-3AA0 | 6SL3000-0BE34-4AA0 |
| **1400-8D-53** | 6SE6430-2UD42-0GA0 | 6SE6400-0BE00-0AA0 | 6SL3000-0CE35-1AA0 | 6SL3000-0BE34-4AA0 |

# Technical Data

## Technical Data according to ErP-REGULATION 327/2011/EU

| RZM | Overall efficiency $\eta_e$ [%] | Measurement category | Efficiency category | achieved efficiency grade at optimum energy efficiency "N" | required efficiency grade acc. to ErP since 2013 | 2015 | Speed control (VSD) | Rated motor power at optimum energy efficiency $P_e$ [kW] | Flow rate at optimum energy efficiency $q_V$ [m³/h] | Pressure at optimum energy efficiency $p_F$ [Pa] | Speed at optimum energy efficiency N [1/min] | "specific ratio" |
|---|---|---|---|---|---|---|---|---|---|---|---|---|
| **15-0400-4W-16** | 68.5 | B | TOTAL | **75.2** | 61 | 64 | must be installed | 2.28 | 7149 | 786 | 1760 | 1.008 |
| **15-0400-4W-17** | 69.9 | B | TOTAL | **75.3** | 61 | 64 | must be installed | 3.04 | 7921 | 965 | 1950 | 1.010 |
| **15-0400-4W-19** | 70.7 | B | TOTAL | **74.9** | 61 | 64 | must be installed | 3.97 | 8693 | 1162 | 2140 | 1.012 |
| **15-0400-4W-21** | 71.2 | B | TOTAL | **74.0** | 61 | 64 | must be installed | 5.49 | 9708 | 1450 | 2390 | 1.014 |
| **15-0400-4W-23** | 72.6 | B | TOTAL | **74.3** | 61 | 64 | must be installed | 6.93 | 10562 | 1716 | 2600 | 1.017 |
| **15-0400-2W-26** | 73.2 | B | TOTAL | **73.3** | 61 | 64 | must be installed | 10.19 | 12044 | 2232 | 2965 | 1.022 |
| **15-0400-2W-27** | 74.3 | B | TOTAL | **74.0** | 61 | 64 | must be installed | 13.85 | 13405 | 2764 | 3300 | 1.028 |
| **15-0450-4W-19** | 70.6 | B | TOTAL | **74.9** | 61 | 64 | must be installed | 3.91 | 10063 | 988 | 1760 | 1.010 |
| **15-0450-4W-21** | 71.3 | B | TOTAL | **74.2** | 61 | 64 | must be installed | 5.35 | 11206 | 1225 | 1960 | 1.012 |
| **15-0450-4W-23** | 72.7 | B | TOTAL | **74.2** | 61 | 64 | must be installed | 7.21 | 12464 | 1515 | 2180 | 1.015 |
| **15-0450-4W-26** | 73.7 | B | TOTAL | **73.7** | 61 | 64 | must be installed | 10.48 | 14179 | 1961 | 2480 | 1.020 |
| **15-0450-4W-28** | 74.5 | B | TOTAL | **74.2** | 61 | 64 | must be installed | 14.13 | 15723 | 2411 | 2750 | 1.024 |
| **15-0450-2W-28** | 75.0 | B | TOTAL | **74.5** | 61 | 64 | must be installed | 16.73 | 16667 | 2709 | 2915 | 1.027 |
| **15-0450-2W-30** | 75.4 | B | TOTAL | **74.7** | 61 | 64 | must be installed | 19.62 | 17610 | 3024 | 3080 | 1.030 |
| **15-0500-4W-19** | 71.4 | B | TOTAL | **75.6** | 61 | 64 | must be installed | 4.02 | 11813 | 875 | 1460 | 1.009 |
| **15-0500-4W-21** | 72.0 | B | TOTAL | **74.7** | 61 | 64 | must be installed | 5.55 | 13188 | 1091 | 1630 | 1.011 |
| **15-0500-4W-23** | 73.3 | B | TOTAL | **74.7** | 61 | 64 | must be installed | 7.46 | 14645 | 1345 | 1810 | 1.013 |
| **15-0500-4W-26** | 74.0 | B | TOTAL | **74.0** | 61 | 64 | must be installed | 11.06 | 16748 | 1759 | 2070 | 1.018 |
| **15-0500-4W-28** | 74.8 | B | TOTAL | **74.5** | 61 | 64 | must be installed | 14.81 | 18528 | 2153 | 2290 | 1.022 |
| **15-0500-4W-30** | 75.7 | B | TOTAL | **75.1** | 61 | 64 | must be installed | 18.37 | 19985 | 2505 | 2470 | 1.025 |
| **15-0500-4W-31** | 75.8 | B | TOTAL | **75.0** | 61 | 64 | must be installed | 21.63 | 21117 | 2797 | 2610 | 1.028 |
| **15-0560-4W-23** | 73.1 | B | TOTAL | **74.4** | 61 | 64 | must be installed | 7.43 | 16944 | 1154 | 1500 | 1.012 |
| **15-0560-4W-26** | 74.0 | B | TOTAL | **74.0** | 61 | 64 | must be installed | 10.87 | 19316 | 1500 | 1710 | 1.015 |
| **15-0560-4W-28** | 75.0 | B | TOTAL | **74.7** | 61 | 64 | must be installed | 14.71 | 21462 | 1851 | 1900 | 1.019 |
| **15-0560-4W-30** | 75.6 | B | TOTAL | **75.0** | 61 | 64 | must be installed | 18.08 | 23043 | 2134 | 2040 | 1.021 |
| **15-0560-4W-31** | 76.0 | B | TOTAL | **75.2** | 61 | 64 | must be installed | 21.35 | 24399 | 2393 | 2160 | 1.024 |
| **15-0560-4W-33** | 76.6 | B | TOTAL | **75.5** | 61 | 64 | must be installed | 29.04 | 27110 | 2954 | 2400 | 1.030 |
| **15-0630-6W-23** | 70.3 | B | TOTAL | **74.3** | 61 | 64 | must be installed | 4.16 | 16533 | 637 | 1000 | 1.006 |
| **15-0630-6W-24** | 71.2 | B | TOTAL | **73.9** | 61 | 64 | must be installed | 5.62 | 18351 | 785 | 1110 | 1.008 |
| **15-0630-6W-26** | 72.8 | B | TOTAL | **74.1** | 61 | 64 | must be installed | 7.57 | 20418 | 971 | 1235 | 1.010 |
| **15-0630-4W-28** | 76.1 | B | TOTAL | **75.8** | 61 | 64 | must be installed | 14.04 | 25460 | 1510 | 1540 | 1.015 |
| **15-0630-4W-30** | 76.4 | B | TOTAL | **75.9** | 61 | 64 | must be installed | 17.50 | 27444 | 1755 | 1660 | 1.018 |
| **15-0630-4W-31** | 76.8 | B | TOTAL | **76.0** | 61 | 64 | must be installed | 20.77 | 29097 | 1972 | 1760 | 1.020 |
| **18-0630-4W-34** | 77.6 | B | TOTAL | **76.5** | 61 | 64 | must be installed | 28.37 | 32404 | 2446 | 1960 | 1.024 |
| **18-0630-4W-36** | 77.8 | B | TOTAL | **76.5** | 61 | 64 | must be installed | 34.81 | 34718 | 2808 | 2100 | 1.028 |
| **15-0710-6W-26** | 72.5 | B | TOTAL | **73.8** | 61 | 64 | must be installed | 7.50 | 23694 | 826 | 1015 | 1.008 |
| **15-0710-6W-28** | 74.0 | B | TOTAL | **74.0** | 61 | 64 | must be installed | 10.96 | 27079 | 1078 | 1160 | 1.011 |
| **15-0710-6W-31** | 74.9 | B | TOTAL | **74.5** | 61 | 64 | must be installed | 14.90 | 30114 | 1334 | 1290 | 1.013 |
| **15-0710-4W-31** | 76.9 | B | TOTAL | **76.2** | 61 | 64 | must be installed | 20.38 | 33732 | 1673 | 1445 | 1.017 |
| **15-0710-4W-33** | 77.5 | B | TOTAL | **76.4** | 61 | 64 | must be installed | 27.98 | 37584 | 2077 | 1610 | 1.021 |
| **15-0710-4W-36** | 77.7 | B | TOTAL | **76.4** | 61 | 64 | must be installed | 34.62 | 40385 | 2399 | 1730 | 1.024 |
| **15-0710-4W-37** | 78.1 | B | TOTAL | **76.6** | 61 | 64 | must be installed | 42.12 | 43186 | 2743 | 1850 | 1.027 |
| **18-0710-4W-39** | 78.6 | B | TOTAL | **76.8** | 61 | 64 | must be installed | 51.35 | 46221 | 3142 | 1980 | 1.031 |

# Technical Data

## Technical Data according to ErP-REGULATION 327/2011/EU

| RZM | Overall efficiency $\eta_e$ [%] | Measurement category | Efficiency category | achieved efficiency grade at optimum energy efficiency "N" | required efficiency grade acc. to ErP since 2013 | 2015 | Speed control (VSD) | Rated motor power at optimum energy efficiency $P_e$ [kW] | Flow rate at optimum energy efficiency $q_V$ [m³/h] | Pressure at optimum energy efficiency $p_F$ [Pa] | Speed at optimum energy efficiency N [1/min] | "specific ratio" |
|---|---|---|---|---|---|---|---|---|---|---|---|---|
| **15-0800-6W-28** | 74.8 | B | TOTAL | **74.8** | 61 | 64 | must be installed | 11.15 | 31938 | 940 | 960 | 1.009 |
| **15-0800-6W-31** | 76.2 | B | TOTAL | **75.9** | 61 | 64 | must be installed | 14.33 | 34932 | 1125 | 1050 | 1.011 |
| **15-0800-6W-33** | 76.5 | B | TOTAL | **75.9** | 61 | 64 | must be installed | 17.79 | 37594 | 1303 | 1130 | 1.013 |
| **15-0800-6W-34** | 77.0 | B | TOTAL | **76.3** | 61 | 64 | must be installed | 21.15 | 39922 | 1469 | 1200 | 1.015 |
| **15-0800-6W-37** | 77.7 | B | TOTAL | **76.6** | 61 | 64 | must be installed | 28.56 | 44247 | 1805 | 1330 | 1.018 |
| **15-0800-6W-39** | 78.1 | B | TOTAL | **76.8** | 61 | 64 | must be installed | 35.29 | 47574 | 2087 | 1430 | 1.021 |
| **18-0800-4W-37** | 79.1 | B | TOTAL | **77.6** | 61 | 64 | must be installed | 41.06 | 50236 | 2327 | 1510 | 1.023 |
| **18-0800-4W-39** | 79.4 | B | TOTAL | **77.7** | 61 | 64 | must be installed | 50.00 | 53729 | 2662 | 1615 | 1.027 |
| **15-0900-8D-31** | 72.9 | B | TOTAL | **72.8** | 61 | 64 | must be installed | 11.25 | 36930 | 799 | 790 | 1.008 |
| **15-0900-8D-33** | 72.5 | B | TOTAL | **72.1** | 61 | 64 | must be installed | 15.10 | 40669 | 969 | 870 | 1.010 |
| **15-0900-6W-34** | 77.2 | B | TOTAL | **76.5** | 61 | 64 | must be installed | 20.58 | 46045 | 1242 | 985 | 1.012 |
| **15-0900-6W-37** | 77.7 | B | TOTAL | **76.7** | 61 | 64 | must be installed | 28.46 | 51421 | 1549 | 1100 | 1.015 |
| **15-0900-6W-39** | 78.3 | B | TOTAL | **76.9** | 61 | 64 | must be installed | 34.90 | 55161 | 1783 | 1180 | 1.018 |
| **15-0900-6W-41** | 78.6 | B | TOTAL | **77.1** | 61 | 64 | must be installed | 42.31 | 58900 | 2032 | 1260 | 1.020 |
| **15-0900-6W-42** | 78.9 | B | TOTAL | **77.2** | 61 | 64 | must be installed | 51.83 | 63107 | 2333 | 1350 | 1.023 |
| **18-0900-4W-41** | 79.9 | B | TOTAL | **77.8** | 61 | 64 | must be installed | 68.17 | 69418 | 2823 | 1485 | 1.028 |
| **15-1000-8D-33** | 72.5 | B | TOTAL | **72.1** | 61 | 64 | must be installed | 15.00 | 46354 | 844 | 735 | 1.008 |
| **15-1000-8D-36** | 74.7 | B | TOTAL | **74.1** | 61 | 64 | must be installed | 18.08 | 49823 | 976 | 790 | 1.010 |
| **15-1000-8D-37** | 75.0 | B | TOTAL | **74.2** | 61 | 64 | must be installed | 21.63 | 52976 | 1103 | 840 | 1.011 |
| **15-1000-8D-39** | 75.6 | B | TOTAL | **74.5** | 61 | 64 | must be installed | 29.13 | 58652 | 1352 | 930 | 1.014 |
| **15-1000-6W-39** | 78.4 | B | TOTAL | **77.1** | 61 | 64 | must be installed | 34.42 | 62751 | 1547 | 995 | 1.015 |
| **15-1000-6W-41** | 78.7 | B | TOTAL | **77.2** | 61 | 64 | must be installed | 41.44 | 66851 | 1756 | 1060 | 1.018 |
| **15-1000-6W-42** | 79.2 | B | TOTAL | **77.4** | 61 | 64 | must be installed | 51.25 | 71896 | 2031 | 1140 | 1.020 |
| **18-1000-6W-44** | 79.6 | B | TOTAL | **77.6** | 61 | 64 | must be installed | 69.62 | 79779 | 2501 | 1265 | 1.025 |
| **13-1120-8D-39** | 75.6 | B | TOTAL | **74.5** | 61 | 64 | must be installed | 29.13 | 68225 | 1163 | 770 | 1.012 |
| **13-1120-8D-41** | 76.1 | B | TOTAL | **74.8** | 61 | 64 | must be installed | 36.25 | 73542 | 1351 | 830 | 1.014 |
| **13-1120-8D-42** | 76.4 | B | TOTAL | **74.8** | 61 | 64 | must be installed | 44.52 | 78858 | 1553 | 890 | 1.016 |
| **13-1120-8D-44** | 77.0 | B | TOTAL | **75.2** | 61 | 64 | must be installed | 53.75 | 84174 | 1770 | 950 | 1.018 |
| **13-1120-6W-44** | 79.6 | B | TOTAL | **77.5** | 61 | 64 | must be installed | 70.19 | 93034 | 2162 | 1050 | 1.022 |
| **13-1120-6W-46** | 80.2 | B | TOTAL | **77.9** | 61 | 64 | must be installed | 83.46 | 98794 | 2438 | 1115 | 1.024 |
| **13-1250-8D-42** | 76.2 | B | TOTAL | **74.7** | 61 | 64 | must be installed | 44.42 | 91151 | 1337 | 740 | 1.013 |
| **13-1250-8D-44** | 76.8 | B | TOTAL | **75.0** | 61 | 64 | must be installed | 53.65 | 97310 | 1524 | 790 | 1.015 |
| **13-1250-8D-46** | 77.1 | B | TOTAL | **75.0** | 61 | 64 | must be installed | 73.85 | 108396 | 1891 | 880 | 1.019 |
| **13-1250-8D-50** | 77.3 | B | TOTAL | **75.0** | 61 | 64 | must be installed | 88.37 | 115171 | 2135 | 935 | 1.021 |
| **13-1250-6W-50** | 80.3 | B | TOTAL | **77.8** | 61 | 64 | must be installed | 100.96 | 121946 | 2394 | 990 | 1.024 |
| **13-1250-6W-51** | 80.4 | B | TOTAL | **77.7** | 61 | 64 | must be installed | 122.12 | 129952 | 2718 | 1055 | 1.027 |
| **13-1400-8D-50** | 77.3 | B | TOTAL | **75.0** | 61 | 64 | must be installed | 86.92 | 133253 | 1816 | 770 | 1.018 |
| **13-1400-8D-51** | 77.5 | B | TOTAL | **75.0** | 61 | 64 | must be installed | 104.81 | 141905 | 2060 | 820 | 1.021 |
| **13-1400-8D-52** | 77.7 | B | TOTAL | **75.0** | 61 | 64 | must be installed | 126.92 | 151423 | 2346 | 875 | 1.023 |
| **13-1400-8D-53** | 78.7 | B | TOTAL | **75.8** | 61 | 64 | must be installed | 148.08 | 160076 | 2621 | 925 | 1.026 |
| **13-1400-6W-53** | 81.2 | B | TOTAL | **78.1** | 61 | 64 | must be installed | 175.96 | 171325 | 3003 | 990 | 1.030 |

# RZM 15-0400/-1000

## Specifications

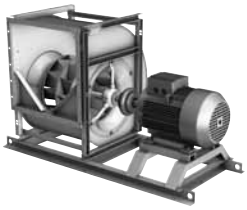

**Hochleistungs-Radialventilatoren RZM 15 rotavent**
Double inlet fan with direct drive by coupling Lockformed scroll casing made of galvanised steel sheet, with side frames, connecting flange at discharge.
Fan with directly coupled motor (incl. PTC-Thermistors) fitted on pedestal and base frame. max. Medium temperature +40 °C.
High performance impeller with 12 hollow section true aerofoil blades inclined obliquely to the shaft axis, welded in postion and painted.
Throat plate inclined obliquely in opposition to blade incination!
Inlet cones matched to the impeller reduce entry losses to a minimum.
Impeller and shaft balanced as an assembly in according to DIN ISO 1940.
Shaft accurately trued, connection to motor (B3) realised with elastic rubber coupling.
Self aligning double row ball bearings secured by adapter sleeve, mounted within a cast iron housing packed with long life, high performance grease. Can be relubricated when not in service.
Performance data (w/o drive) according to tolerance class 1 to DIN 24166.

## Fan data

| Fan type | RZM 15- | | |
|---|---|---|---|
| Volume flow | $q_V$ | | m³/h |
| Static pressure | $p_{sF}$ | | Pa |
| Air density at fan inlet | $\rho_1$ | | kg/m³ |
| Air temperature | t | | °C |
| Speed | N | | 1/min |
| Nominal motor power | $P_N$ | | kW |
| Voltage / Frequency | U / f | | V / Hz |
| Sound power level (A weighted) | $L_{WA}$ | | dB |
| Weight | m | | kg |

## Fittings / Accessories

- Drain plug R1/2"
- Inspection cover fitted
- Corrosion protection S40, K90 or P100
- Impeller blades continuously welded
- Shaft from stainless steel
- Nuts and bolts from stainless steel
- Thread for impuls sensor fitting
- Volumeter IMV
- Copper inlet cone
- Relubricatable bearing
- Relube nipple tube to drive side

- Discharge flange
- Discharge flexible connection
- Inlet guards
- Discharge guard
- Shaft guard
- Coupling guard
- Isolator
- Frequency inverter unit
- Universal control device

# RZM 18-0630/-1000

## Specifications

**High performance centrifugal fan RZM 18 rotavent**
Double inlet fan with direct drive by coupling Lockformed scroll casing made of galvanised steel sheet, with side frames, connecting flange at discharge.
Fan with directly coupled motor (incl. PTC-Thermistors) fitted on pedestal and base frame. max. Medium temperature +40 °C.
High performance impeller with 12 hollow section true aerofoil blades inclined obliquely to the shaft axis, welded in postion and painted.
Throat plate inclined obliquely in opposition to blade incination !
Inlet cones matched to the impeller reduce entry losses to a minimum. Impeller and shaft balanced as an assembly in according to DIN ISO 1940.
Shaft accurately trued, connection to motor (B3) realised with elastic rubber coupling.
Self aligning double row ball bearings within standard plummer blocks, mounted on robust support frame. Can be relubricated when not in service.
Performance data (w/o drive) according to tolerance class 1 to DIN 24166.

## Fan data

| Fan type | RZM 18- | | |
|---|---|---|---|
| Volume flow | $q_V$ | | m³/h |
| Static pressure | $p_{sF}$ | | Pa |
| Air density at fan inlet | $\rho_1$ | | kg/m³ |
| Air temperature | t | | °C |
| Speed | N | | 1/min |
| Nominal motor power | $P_N$ | | kW |
| Voltage / Frequency | U / f | | V / Hz |
| Sound power level (A weighted) | $L_{WA}$ | | dB |
| Weight | m | | kg |

## Fittings / Accessories

- Drain plug R1/2"
- Inspection cover fitted
- Corrosion protection S40, K90 or P100
- Impeller blades continuously welded
- Shaft from stainless steel
- Nuts and bolts from stainless steel
- Thread for impuls sensor fitting
- Volumeter IMV
- Copper inlet cone
- Relubricatable bearing
- Relube nipple tube to drive side

- Discharge flange
- Discharge flexible connection
- Inlet guards
- Discharge guard
- Shaft guard
- Coupling guard
- Isolator
- Frequency inverter unit
- Universal control device

# RZM 13-1120/-1400

## Specifications

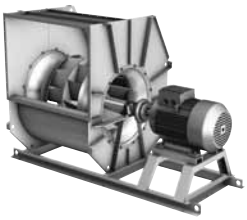

**High performance centrifugal fan RZM 13 rotavent**
Double inlet fan with direct drive by coupling. Heavy duty casing of sheet steel with stiffening members, step welded and painted, with discharge flange.
Split on one axis - 2 segments (size 1120),
Split on two axis - 4 segments (size 1250; 1400).
Fan with directly coupled motor (incl. PTC-Thermistors) fitted on pedestal and base frame. max. Medium temperature +40 °C.
High performance impeller with 12 hollow section true aerofoil blades inclined obliquely to the shaft axis, welded in postion and painted.
Inlet cones matched to the impeller reduce entry losses to a minimum.
Impeller and shaft balanced as an assembly in according to DIN ISO 1940.
Shaft accurately trued, connection to motor (B3) realised with elastic rubber coupling.
Self aligning double row roller bearings within standard plummer blocks, mounted on robust support frame.
Can be relubricated when not in service. Inlet guard fitted as a standard in accordance with DIN EN ISO 13857. Performance data (w/o drive) according to tolerance class 1 to DIN 24166.

## Fan data

| Fan type | RZM 13- | | |
|---|---|---|---|
| Volume flow | $q_V$ | | m³/h |
| Static pressure | $p_{sF}$ | | Pa |
| Air density at fan inlet | $\rho_1$ | | kg/m³ |
| Air temperature | t | | °C |
| Speed | N | | 1/min |
| Nominal motor power | $P_N$ | | kW |
| Voltage / Frequency | U / f | | V / Hz |
| Sound power level (A weighted) | $L_{WA}$ | | dB |
| Weight | m | | kg |

## Fittings / Accessories

- Drain plug R1/2"
- Inspection cover fitted
- Corrosion protection K90 or P100
- Impeller blades continuously welded
- Casing continuously welded inside
- Casing continuously welded inside and outside
- Shaft from stainless steel
- Nuts and bolts from stainless steel
- Thread for impuls sensor fitting
- Volumeter IMV
- Copper inlet cone
- Relubricatable bearing
- Relube nipple tube to drive side

- Discharge flange
- Discharge flexible connection
- Discharge guard
- Shaft guard
- Coupling guard
- Isolator
- Frequency inverter unit
- Universal control device

# Fittings / Accessories

## Drain Plug

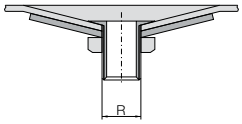


If the fan is installed outside, or if conveying a medium containing humidty, condensation of water may accumulate inside the fan scroll.
For extraction of this water a condense water drain has to be installed at the lowest point of the scroll. The drain will be provided with a thread for connecting it to a piping.

- **R 1/2"** - Sizes 0400/-1000
- **R 1"** - Sizes 1120/-1400

At order please indicate the required casing position.

## Inspection Door

For the purposes of maintenance and cleaning there is an opening, which can be securely closed by means of an access door, in the fan casing.
As it can only be opened with a tool, the access door complies with safety and accident prevention regulations. Additional securing with locking bars can be supplied on request.
The site and orientation of the inspection opening depends on the casing position.
The position should be specified when ordering according to the following diagram:
e.g. Access door, Pos. 2.

### Inspection Door Positions

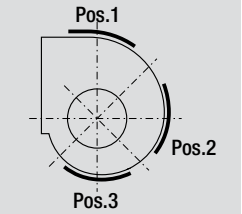

RZM 0400/-1000

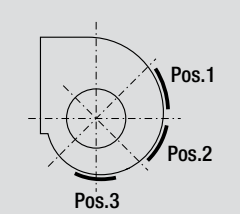

RZM 1120

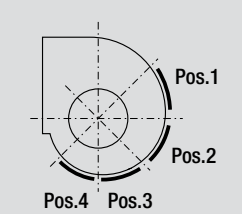

RZM 1250/-1400

**Dimensions** in mm, subject to change.

| RZM ..- | | RZM ..- | |
|---|---|---|---|
| **0400/-0560** | 360 × 360 | **0630/-1400** | 500 × 500 |

## Corrosion Protection Systems

Nicotra Gebhardt fans are treated with high quality corrosion protection as standard. Under extreme operating conditions, however, additional corrosion protection is advisable.
Depending on the use to which the fan is to be put and the degree of exposure to corrosion, we offer various anti-corrosion protection measures.

### Corrosion protection - Class S40

Degreasing, ironphosphating
- **Powder coating**
  Layer thickness ≥40 µm, Colour RAL 7039
- **Wet lacquering**
  Layer thickness ≥40 µm (primer + lacquer finish), Colour RAL 7039

### Corrosion protection - Class K90

Degreasing, ironphosphating
- **Powder coating**
  Layer thickness ≥90 µm, Colour RAL 7039
- **Wet lacquering**
  Layer thickness ≥90 µm (primer + lacquer finish), Colour RAL 7039

### Corrosion protection - Class P100

Degreasing, ironphosphating
- **Thermoplastic powder coating**
  Layer thickness ≥100 µm, Colour RAL 7001

# Fittings / Accessories

## Continuously welded blades

Impeller blades can be continuously welded in order to increase the corrosion resistance when conveying a humid or slightly aggressive medium. The continuous welding has no influence on the material resistance or on the max. tip speed.

## Stainless Steel Shaft

For applications where there is an increased risk of corrosion, an optional shaft made of stainless steel can be supplied.
Stainless steel 1.4305.

## Stainless Steel Nuts and Bolts

For applications where there is an increased risk of corrosion, the connecting elements of the fan can be ordered made of stainless steel.

## Impuls Sensor Thread

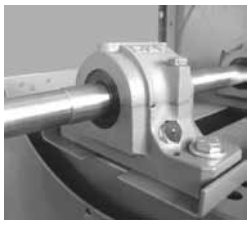

A tapped hole M6 or M8 can be provided in the pedestal bearing cast housing for admission of sensors to measure the shock impulses.
(The measuring connecting piece is not included in the scope of delivery).

## Inlet Cones

Inlet cone of copper or aluminium prevent the production of sparks during operation. These can be employed when spark protection is required, but ATEX is not mandatory.

## Relubrications

The lubrication unit IWN allows the fan bearings to be greased even when in operation.
The lubrication tubes screwed into the bearing housing are lead out and fastened at the side wall of the fan. If desired, the lubrication tubes can be lead to the drive side of the fan.

- **IWN 01** - Standard grease, Gadus S2 V100 3
- **IWN 11** - Klüber-Staburags NBU12/300KP

# Fittings / Accessories

## Protection guards

The fans are designed for installation in equipment and as standard are not equipped with protective guards.
**They should not be put into operation before all protective devices are fitted and connected!**
Protective measures must be carried out as set out in DIN EN ISO 12100 "Safety of machinery - Basic concepts, general principles for design".
If the application of the fan allows free access to the inlet and discharge apertures, safety devices must be put in place on the fan in accordance with DIN EN ISO 13857!
Suitable safety guards are available as an optional extra.

## Coupling protection guard

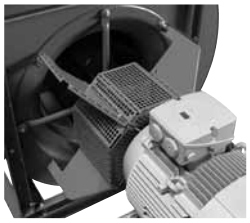

Contact guard for the coupling for double inlet centrifugal fans RZM.
Design in accordance with DIN EN ISO 13857, made of galvanised or coated sheet steel.

## Shaft Guards

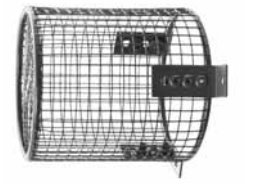

Contact guard for the free end of the shaft for double inlet centrifugal fans. Models in accordance with DIN EN ISO 13857, made of painted steel mesh.

## Flanges and Flexible Connections

Made from galvanized or painted steel, to connect ducts and system components to the fan outlet side.

Connecting piece with elastic intermediate section for the vibration or impact-noise decoupled connection of the fan to the system or unit. Made out of two connecting flanges with elastic intermediate section.

**Temperature range / Application**
- Standard up to +80 °C
- ATEX max. +60 °C

# Fittings / Accessories

## Anti Vibration Spring Diffusers

Anti Vibration Mounts (AVM) are designed to prevent noise and vibrations being transmitted through the base of the fan.

AVMs should be mounted beneath the fan base frame so the weight and spring deflections are evenly distributed. They should not be mounted symmetrically around the centre of gravity of the system when idle, because a counter force is induced into the system by the pressure created by the working fan.

It is difficult for the manufacturer to establish the position of the AVMs to suit all types of application.

Vibration and noise insulation can also be improved by ensuring that the fan is connected to its external environment by a flexible coupling.
The AVMs are supplied with the suitable mounting material for the base frame (CC- or U-Profiles).

## Anti Vibration Spring Diffusers

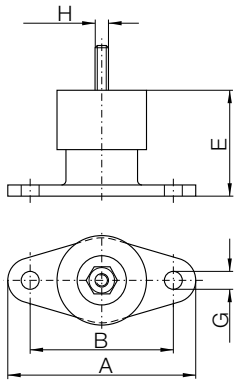


| ZBD | ZBD | A | B | C | D | ~ E | ~ F | G | H |
|---|---|---|---|---|---|---|---|---|---|
| 60-0101A* | 60-0101C* | 130 | 100 | 70 | 72 | 70-50 | 35 | 13 | M10 |
| 60-0103A* | 60-0103C* | 130 | 100 | 70 | 72 | 70-50 | 35 | 13 | M10 |
| 60-0105A* | 60-0105C* | 130 | 100 | 70 | 72 | 70-50 | 35 | 13 | M10 |
| 60-0108A* | 60-0108C* | 130 | 100 | 70 | 72 | 70-50 | 35 | 13 | M10 |
| 60-0112A* | 60-0112C* | 150 | 120 | 82 | 92 | 90-75 | 35 | 13 | M12 |
| 60-0120A* | 60-0120C* | 150 | 120 | 82 | 92 | 90-75 | 35 | 13 | M12 |
| 60-0130A* | 60-0130C* | 150 | 120 | 82 | 92 | 90-75 | 35 | 13 | M12 |
| 60-0150A* | 60-0150C* | 150 | 120 | 82 | 92 | 110-85 | 35 | 13 | M12 |

* **A** = for U-profile; **C** = for CC-profile

## Anti Vibration Spring Diffusers

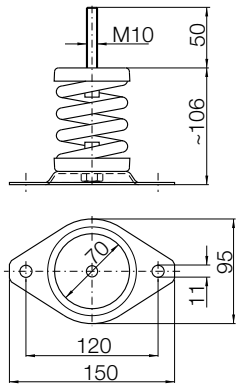


| ZBD | ZBD | |
|---|---|---|
| SP-7501A* | SP-7501C* | |
| SP-7502A* | SP-7502C* | |
| SP-7503A* | SP-7503C* | |
| SP-7504A* | SP-7504C* | |
| SP-7505A* | SP-7505C* | |
| SP-7506A* | SP-7506C* | |
| SP-7507A* | SP-7507C* | |
| SP-7508A* | SP-7508C* | |

* **A** = for U-profile; **C** = for CC-profile

# Fittings / Accessories

## Volumeter

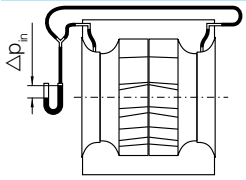


$$q_V = K \times \sqrt{\frac{2}{\rho} \times \Delta p_{Dü}}$$

With the flow measuring device it is possible to easilymeasure / monitor the flow rate after the fan is installed. A pressure tapping at a predetermined position on the inlet cone is provided whereby the differential pressure in relation to the static pressure is measured in front ofthe inlet cone in a static atmosphere.

- **volume flow $q_V$ [m³/h]**
- **calibration factor K [m²s/h]**
- **density of media ρ [kg/m³]**
- **pressure difference at cone $\Delta p_{Dü}$ [Pa]**

Measuring connector in inlet cone
Hose pipe to connecting piece in the side wall
Connecting piece (external diameter of 6mm) for the pressure measurement

In order to calculate the flow rate, a calibrating factor "K" is required. This factor is determined by comparativemeasurement on a standard test rig.

### Calibration factors

| RZM ..- | K10 [m²s/h] | RZM ..- | K10 [m²s/h] |
|---|---|---|---|
| **0400** | 265 | **0800** | 1140 |
| **0450** | 320 | **0900** | 1370 |
| **0500** | 395 | **1000** | 1760 |
| **0560** | 520 | **1120** | 2400 |
| **0630** | 700 | **1250** | 3000 |
| **0710** | 885 | **1400** | 3800 |

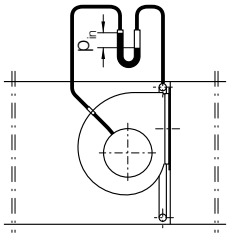


**Standard-calibration faktor K10 <10 %**
Where fans are built into a plenum, the pressure difference between the static pressure in the inlet side plenum and the pressure on the inlet cone is to bemeasured. It must be ensured that the static pressureto be measured in front of the inlet cone is not tampered by dynamic pressure fractions. It is often recommended to arrange a ring of points on the wall facing the outlet side as illustrated in the sketch. When using the K-factors specified below, a minimum clearance of 0.5×D between the inlet cone of the fan and the side wall of the plenum must be maintained. Indentations that obstruct the flow to the cone canlead to faults when measuring the flow rate. In the event that the differential pressure is fed via a pressure sensor, the signal can also be used for regulating purposes.

### Electrical accessories

Electrical accessories (Frequency converter, Differential pressure sensor, Universal control device, Isolator) see chapter "Accessories".

# Description

## Safety

The fans are designed for installation in equipment and as standard are not equipped with protective guards.
**They should not be put into operation before all protective devices are fitted and connected!**
Protective measures must be carried out as set out in DIN EN ISO 12100 "Safety of machinery - Basic concepts, general principles for design".
If the application of the fan allows free access to the inlet and discharge apertures, safety devices must be put in place on the fan in accordance with DIN EN ISO 13857!
Suitable safety guards are available as an optional extra.

## Performance data

The curves show the total pressure rise $p_F$ as a function of the volume flow rate $q_V$ plotted in a double logarithmical diagram. The throttle curves (system resistance parabolas) are then represented by straight lines.
The curves are established with a reference density of $\rho_1$ = 1.2 kg/m³ at the fan intake.
The pressure and impeller input power are directly proportional to density $\rho_1$.
Outlet velocity $v_2$ and the dynamic pressure $p_{d2}$ refer to the flanged cross section area at the fan discharge.
The increase in static pressure $p_{sF}$ when a duct is fitted to the discharge (Installation B) can be calculated from the equation:

$$p_{sF} = p_F - p_{d2}$$

Where no duct is fitted (Installation A) there is no static pressure regain. The increase in pressure $p_{sF}$ can be calculated from formula:

$$p_{sF} = p_F - f_{pd} \times p_{d2}$$

**The limits of application indicated in the fan curves (by blue dotted lines) outline the recommended functional range of the fans, where a stable operation with high efficiency can be expected.**

The efficiency marked on the straight system lines is only applicable at the maximum fan speed $N_{max}$; it decreases with lower fan speed.

# Description

## Sound

Sound measurement and analysis are carried out in accordance with DIN 45635-38 ”Sound measurement at machines; fans”.
The sound data of the fan curves are given as “A” weighted sound power levels $L_{WA}$.
The “A” weighted sound power level are identical for fan intake ($L_{WA7}$) as well as for fan discharge ($L_{WA4}$).
An approximation of the “A” weighted sound pressure levels $L_{pA7}/L_{pA6}$ at a distance of 1m at fan Inlet or discharge may be obtained by subtracting 7dB from the relative “A” weighted sound power levels.

If should be noted that site acoustics, duct design, reverberation, natural frequencies etc. can all influence noise to a greater or lesser extent.

For more accurate calculations to determine noise protection measures, the sound power level in each octave band is of more value.

- Inlet side: $L_{Wfc7} = L_{WA4/7} + L_{Wrel7}$
- Discharge side: $L_{Wfc4} = L_{WA4/7} + L_{Wrel4}$

The noise correction data, in function of the fan speed and flow rate, are to be found with the corresponding table on the fan curve page.
In some cases the noise level - calculated by this way - may in some cases be higher than expected at the blade passing frequency.

$$f_{BP} = \frac{N \times z}{60}$$

**Blade passing frequency**
$f_{BP}$ = Blade passing frequency in Hz
N = Fan speed in 1/min
z = Number of blades

$$L_{Wfc6} = L_{Wfc4} + L_{Wer}$$

For a free discharge situation i.e. without duct connected the sound level will be lower because of an end reflection.
This is specially true for low frequencies. For this case a correction may be applied to $L_{Wfc4}$ of the first 3 octave bands as follows:

| RZM ..- | $f_m$ | 63 | 125 | 250 | Hz |
|---|---|---|---|---|---|
| 0400/-0800 | $L_{Wer}$ | -9 | -4 | -2 | dB |
| 0900/-1400 | $L_{Wer}$ | -4 | -1 | 0 | dB |

## Media

This range of fans are specially designed for use into air handling units (AHU) and ventilation systems.
The centrifugal fans are ideal for conveying clean air. The allowed air temperature comes from -20 °C to +40 °C.

## Motors

Standard motors of wellknown brands, type of protection IP55, thermal class F, are used. During commissioning and maintenance the detailed instructions provided by the motor manufacturer (type plate/motor operating instructions) must be followed, this also applies to the motor protection devices required onsite. The motors are equipped with PTC resistors/temperature sensors as standard. Motors with integrated frequency inverters may be supplied on request.

## Electric connection

The centrifugal fans are delivered ready for installation.
The motor terminal box can be accessed easily.
Electric installation must be carried out according to the applicable provisions in compliance with local regulations. A terminal board circuit diagram showing correct connection is enclosed with every motor.
Updated circuit diagrams are also available online at www.nicotra-gebhardt.com.
In case of operation with frequency inverters, always follow the respective operating instructions!

# Nicotra Gebhardt worldwide

**nicotra-gebhardt.com**

EN-TD3-CFD-DI-BW-1.4 – PDF1-September2013

**AUSTRALIA**
65 Yale Drive,
Epping, VIC 3076
Phone +61 3 9017 5333
Fax +61 3 8401 3969
E-mail info@nicotra.com.au

**BELGIUM**
Haeghensgoed, 13 - 00/01
9270 Laarne
Phone +32 (0)9-336-00-01
Fax +32 (0)9-336-00-05
E-mail info.nicotra@nicotra.be

**CHINA**
88 Tai'An Road, XinQiao, ShiJi, Panyu
Guangzhou 511450
PR CHINA
Phone +86 (0)20-2293 5700
Fax +86 (0)20-2293 5701
E-mail sales@nicotra-china.com

**FRANCE**
Leader's Park Bat A1
3 chemin des Cytises
69340 Francheville
Phone +33 (0)4 72 79 01 20
Fax +33 (0)4 72 79 01 21
E-mail g.cauche@nicotra-gebhardt.com

**GERMANY**
Gebhardtstraße 19-25
74638 Waldenburg
Phone +49 (0)7942 101 0
Fax +49 (0)7942 101 170
E-mail info@nicotra-gebhardt.com

**GREAT BRITAIN**
Unit D, Rail Mill Way
Parkgate Business Park
Rotherham
South Yorkshire
S62 6JQ
Phone +044 01709-780760
Fax +044 01709-780762
E-mail sales@nicotra.co.uk

**INDIA**
Plot no 28F & 29, Sector-31,Kasna,
Greater Noida-201 308 U.P (India)
Phone +91 120 4783400
Phone +91 22 65702056 (Mumbai)
Phone +91 80 25727830 (Bangalore)
E-mail info@nicotraindia.com

**ITALY**
Via Modena, 18
24040 Zingonia (BG)
Phone +39 035 873 111
Fax +39 035 884 319
E-mail info@nicotra-gebhardt.com

**MALAYSIA**
Lot 1799, Jalan Balakong
Taman Perindustrian Bukit Belimbing
43300 Seri Kembangan
Selangor
Phone +603 8961-2588
Fax +603 8961-8337
E-mail info_malaysia@nicotra-gebhardt.com

**SPAIN**
Ctra. Alcalá-Villar del Olmo, Km. 2,830
28810 Villalbilla-Madrid
Phone +34 918-846110
Fax +34 918-859450
E-mail info@nicotra.es

**SINGAPORE**
3, Science Park Drive, # 04-07, The Franklin
Singapore Science Park 1
Singapore 118223
Phone +65 6265 1522
Fax +65 6265 2400
E-mail info_singapore@nicotra-gebhardt.com

**SWEDEN**
Kraketorpsgatan 30
43153 Mölndal
Phone 0046 101-302600
Fax 0046 31-878590
E-mail info.se@nicotra-gebhardt.com

**THAILAND**
6/29 Soi Suksawadi 2, Moo 4, Suksawadi Road,
Kwang Jomthong, Khet Jomthong,
Bangkok 10150
Phone +662 476-1823-6
Fax +662 476-1827
E-mail sales@nicotra.co.th

**UNITED STATES**
PO BOX 900921
Sandy, Utah 84090
Phone 001(801) 733-0248
Fax 001(801) 315-9400
Mobile 001(801) 682 0898
E-mail mike.sehgal@gebhardtfans.com
http://www.gebhardtfans.com/

**Nicotra Gebhardt Germany**

Nicotra Gebhardt GmbH
Gebhardtstraße 19-25
74638 Waldenburg
Germany
Phone +49 (0)7942 101 0
Fax +49 (0)7942 101 170
E-Mail info@nicotra-gebhardt.com

**Nicotra Gebhardt Italy**

Nicotra Gebhardt S.p.A
Via Modena, 18
24040 Zingonia (BG)
Italy
Phone +39 035 873 111
Fax +39 035 884 319
E-Mail info@nicotra-gebhardt.com

NICOTRA | Gebhardt
fan|tastic solutions